YAMAHA

PARTS CATALOGUE

Wave Runner FZR

GX1800-H (F2R1/6ANA/6AN1)
GX1800-H (F2R2/6ANB/6AN1)
GX1800-H (F2R3/6ANC/6AN1)

1HF2R-100E1

( )

YAMAHA
GENUINE
Parts & Accessories

GX1800-H
PARTS CATALOGUE
©2008 by Yamaha Motor Co., Ltd.
1st edition, December 2008
All rights reserved.
Any reprinting or unauthorized use
without the written permission of
Yamaha Motor Co., Ltd.
is expressly prohibited.
Printed in Japan.

FOREWORD

This Parts Catalogue is related to the parts for the model(s) on the cover page. When you are ordering replacement parts, please refer to this Parts Catalogue and quote both part numbers and part names correctly.

1. Modifications or additions which have been made after the issue of the Parts Catalogue will be announced in the Parts News.
   It is advisable that you make the necessary corrections to the Parts Catalogue according to the Parts News.

2. Abbreviations
   The following abbreviations are used in this Parts Catalogue.

   “UR” Use specified parts number.
   “UN” Use as many as needed.
   “AP” Alternate Parts
   “LM” Locally Made (Parts need to be ordered locally)
   “F#” Frame No. (Applicable machine No.)
   “O/S” Over Size

3. The number of components for assembly
   - Parts, which are to be supplied in an assembly, are listed with a dot (.) in front of the part name as shown below.
   - The numeral appearing to the right of each component part indicates the quantity of parts for each assembly unit.

PART NO.	DESCRIPTION	Q’TY	REMARKS
2F5–83310–60	FRONT FLASHER LIGHT ASSY	2	
115–83311–60	.BULB (6V–18W)	1	

4. Applicable colours of graphics are represented in the “REMARKS” as shown below.

PART NO.	DESCRIPTION	Q’TY	REMARKS
2N4–24110–00–X5	FUEL TANK COMP.	2	MXR
3J1–24240–10	.GRAPHIC, FUEL TANK	1	FOR MXR

5. Note that the illustrations for reference in finding parts numbers are not to be used for assembling. When assembling, please use the applicable service manual.

6. The asterisk (*) before a reference number indicates modified items after the first edition.

7. Applicable Serial No.

Engine Serial No.

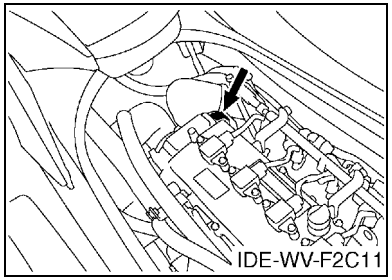

Hull Serial No.

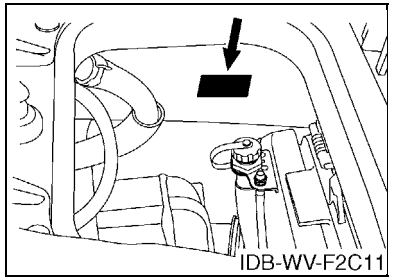

8. Applicable Colour Code (The (*) mark shows Model colour.)

Abbreviation	Colour Name	Colour Code
DPBMT(*)	DEEP PURPLISH BLUE METALLIC T	0978
BMG	BLACK METALLIC G	1050

9. Quantity Column Information

Column No.	Name Of Q'ty Column	Destination
1	CAN	CANADA
2	EUR	EUROPE
3	GENE	EXCEPT CANADA, EUROPE

10. Applicable Starting Serial No.

Engine Serial No.

Serial No.	Name Of Q'ty Column	Model Code
6ANA-1000301	CAN	6ANA
6ANC-1000001	EUR	6ANC
6ANB-1000101	GENE	6ANB

Hull Serial No.

Serial No.	Name Of Q'ty Column	Model Code
F2R-800301	CAN	F2R1
F2R-800201	EUR	F2R3
F2R-800101	GENE	F2R2

CONTENTS

CYLINDER 1 1
CYLINDER 2 2
CRANKCASE 3
CRANKSHAFT & PISTON 5
VALVE 7
INTAKE 1 9
INTAKE 2 11
INTAKE 3 13
OIL PUMP 14
OIL PAN 15
OIL COOLER 16
BREATHER OIL 17
EXHAUST 1 18
EXHAUST 2 19
JET UNIT 1 22
JET UNIT 2 24
JET UNIT 3 25
JET UNIT 4 26
GENERATOR 28
STARTING MOTOR 29
ELECTRICAL 1 30
ELECTRICAL 2 32
ELECTRICAL 3 34
ENGINE MOUNT 35
ENGINE HATCH 1 36
ENGINE HATCH 2 38
HULL & DECK 40
GUNWALE & MAT 42
VENTILATION 44
SEAT & UNDER LOCKER 45
FUEL TANK 47
BILGE PUMP 49
EXHAUST 3 50
CONTROL CABLE 52
STEERING 1 54
STEERING 2 56
GRAPHICS 57
IMPORTANT LABELS 58
REPAIR KIT 1 59

INDEX

NUMERICAL INDEX 61

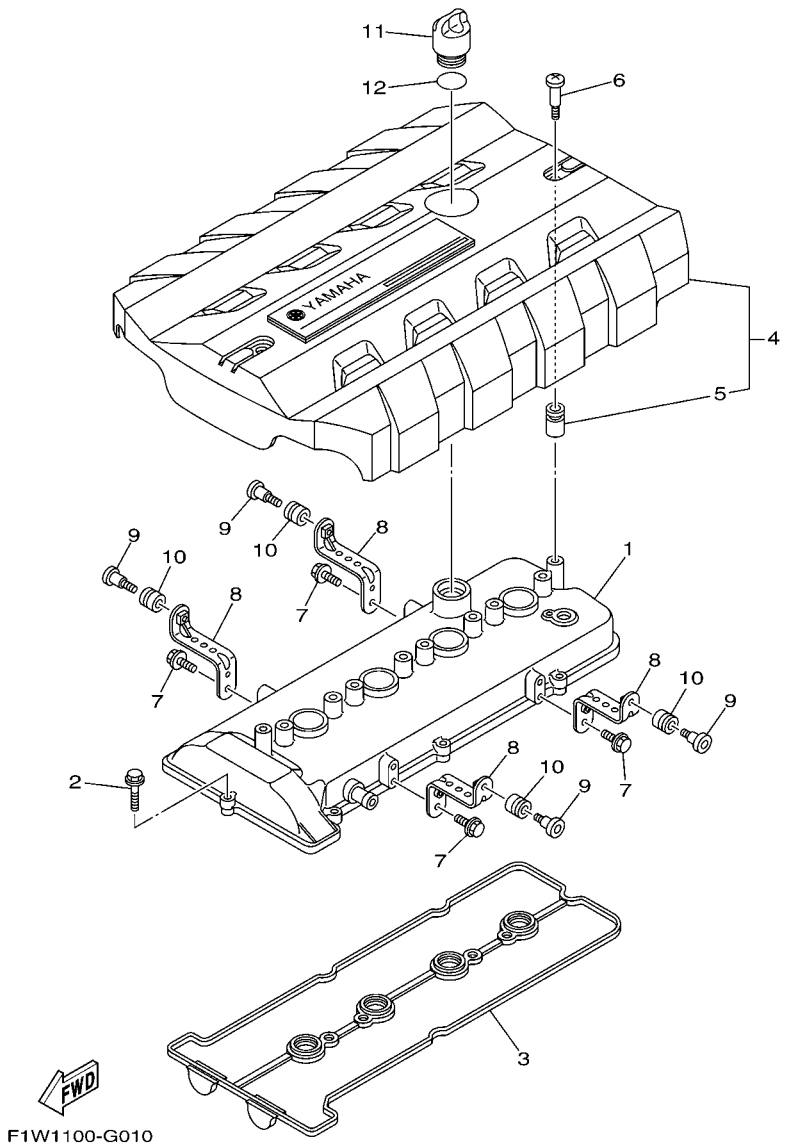

FIG. 1 CYLINDER 1

REF. NO.	PART NO.	DESCRIPTION	CAN	EUR	GENE			REMARKS
1	6S5–11191–00–94	COVER, CYLINDER HEAD 1	1	1	1			
2	90105–06028	BOLT, FLANGE	8	8	8			
3	6S5–11193–00	GASKET, HEAD COVER 1	1	1	1			
4	6S5–E110M–00	COVER ASSY 1	1	1	1			
5	6S5–E1328–00	.GROMMET, ANODE	2	2	2			
6	6S5–E118E–00	BOLT, COVER MOUNTING	2	2	2			
7	90105–06007	BOLT, FLANGE	4	4	4			
8	6S5–11941–00	STAY	4	4	4			
9	6S5–11026–00	BOLT, MOUNT	4	4	4			
10	6S5–1111G–00	RUBBER, MOUNT 1	4	4	4			
11	6S5–15363–00	PLUG, OIL	1	1	1			
12	93210–24M79	O-RING	1	1	1			

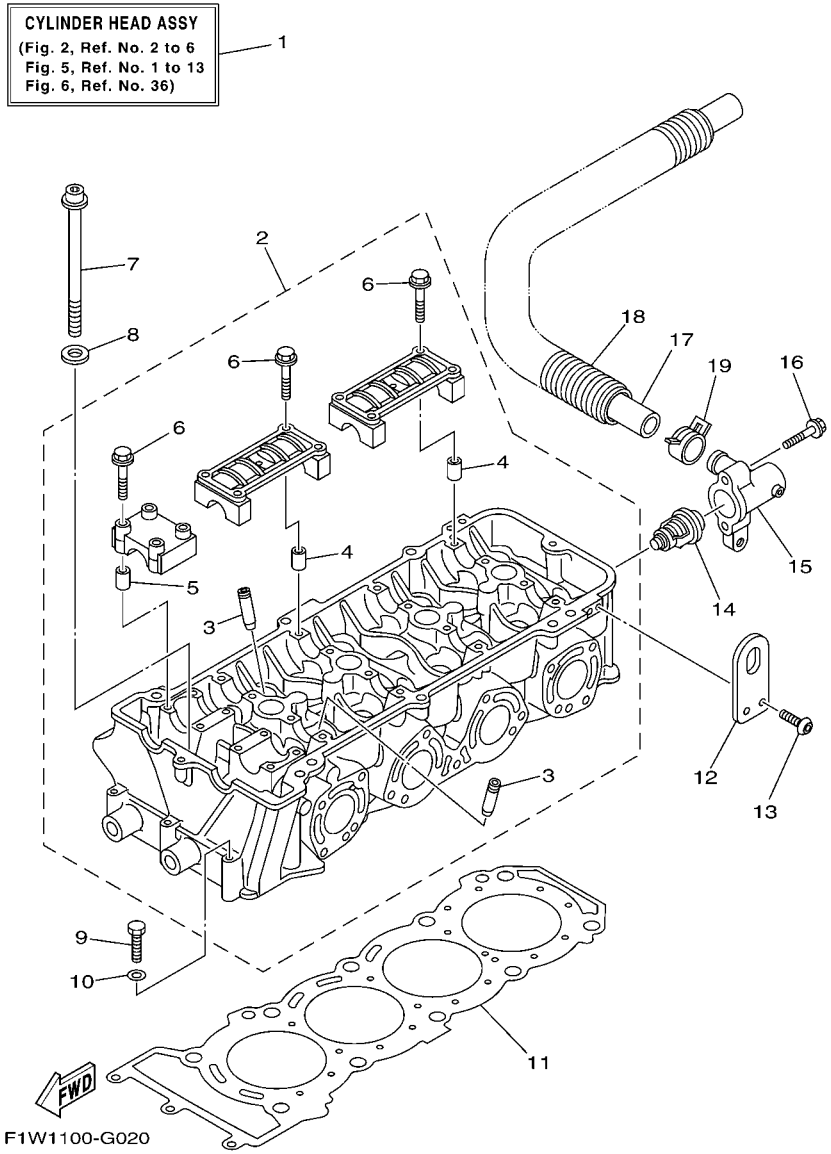

FIG. 2 CYLINDER 2

REF. NO.	PART NO.	DESCRIPTION	CAN	EUR	GENE			REMARKS
1	6S5–W009A–00–94	CYLINDER HEAD ASSY	1	1	1			
2	6S5–11102–00–94	CYLINDER HEAD ASSY	1	1	1			
3	6S5–11133–10	.GUIDE, VALVE 1	16	16	16			
4	91809–16001	.PIN, DOWEL	8	8	8			
5	91809–16001	.PIN, DOWEL	4	4	4			
6	90105–07009	.BOLT, FLANGE	24	24	24			
7	6S5–12228–00	BOLT	10	10	10			
8	90201–12039	WASHER, PLATE	10	10	10			
9	97013–06055	BOLT	3	3	3			
10	92903–06600	WASHER, PLATE	3	3	3			
11	6S5–11181–00	GASKET, CYLINDER HEAD 1	1	1	1			
12	6S5–11119–00	HANGER, ENGINE	2	2	2			
13	92014–06012	BOLT, BUTTON HEAD	4	4	4			
14	60E–12411–01	THERMOSTAT	1	1	1			
15	6S5–12413–00–94	COVER, THERMOSTAT	1	1	1			
16	90105–06035	BOLT, FLANGE	2	2	2			
17	6S5–12578–00	HOSE 3	1	1	1			
18	90447–28008	TUBE	1	1	1			
19	90467–240A0	CLIP	1	1	1			

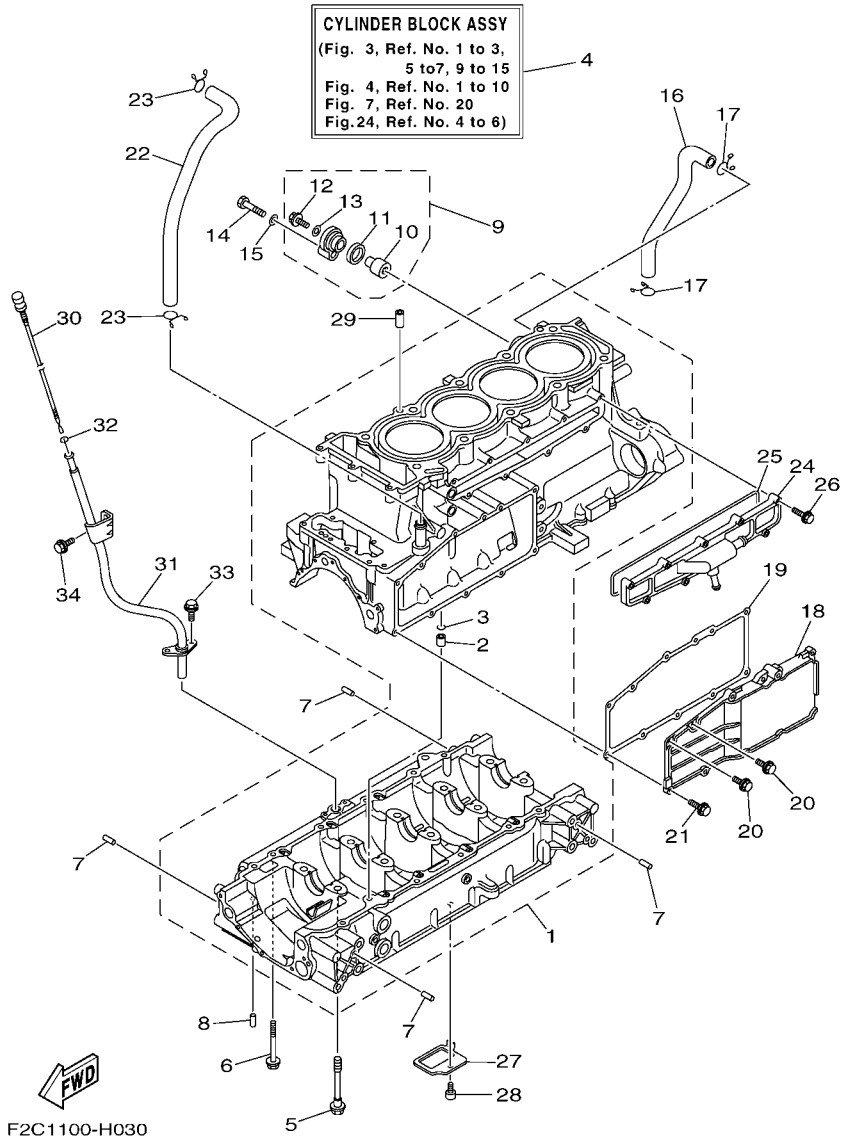

FIG. 3 CRANKCASE

REF. NO.	PART NO.	DESCRIPTION	CAN	EUR	GENE			REMARKS
1	6S5–15100–01–94	CRANKCASE ASSY	1	1	1			
2	99530–10114	.PIN, DOWEL	1	1	1			
3	93210–11453	.O-RING	1	1	1			
4	6S5–W009B–00–94	CYLINDER BLOCK ASSY	1	1	1			
5	90105–10071	BOLT, FLANGE	10	10	10			
6	95814–06070	BOLT, FLANGE	12	12	12			
7	93606–12019	PIN, DOWEL	8	8	8			
8	93604–10M03	PIN, DOWEL	2	2	2			
9	69J–11301–10	ANODE COVER ASSY	1	1	1			
10	68V–11325–02	.ANODE	1	1	1			
11	67F–11328–00	.GROMMET, ANODE	1	1	1			
12	90105–06M07	.BOLT, FLANGE	1	1	1			
13	90430–06M03	.GASKET	1	1	1			
14	97095–08040	BOLT	1	1	1			
15	92995–08600	WASHER	1	1	1			
16	6S5–11377–00	HOSE	1	1	1			
17	90467–190A0	CLIP	2	2	2			
18	6S5–1131M–00–94	COVER	1	1	1			
19	6S5–13557–00	GASKET	1	1	1			
20	95024–06014	BOLT, FLANGE	2	2	2			
21	95024–06020	BOLT, FLANGE	9	9	9			
22	6S5–11126–00	PIPE, BREATHER 3	1	1	1			
23	90467–190A0	CLIP	2	2	2			
24	6S5–12469–01–94	JOINT 1	1	1	1			
25	6S5–12517–01	GASKET, WATER INLET	1	1	1			
26	95023–06025	BOLT	9	9	9			
27	6S5–13337–00	PLATE, BAFFLE LOWER	1	1	1			

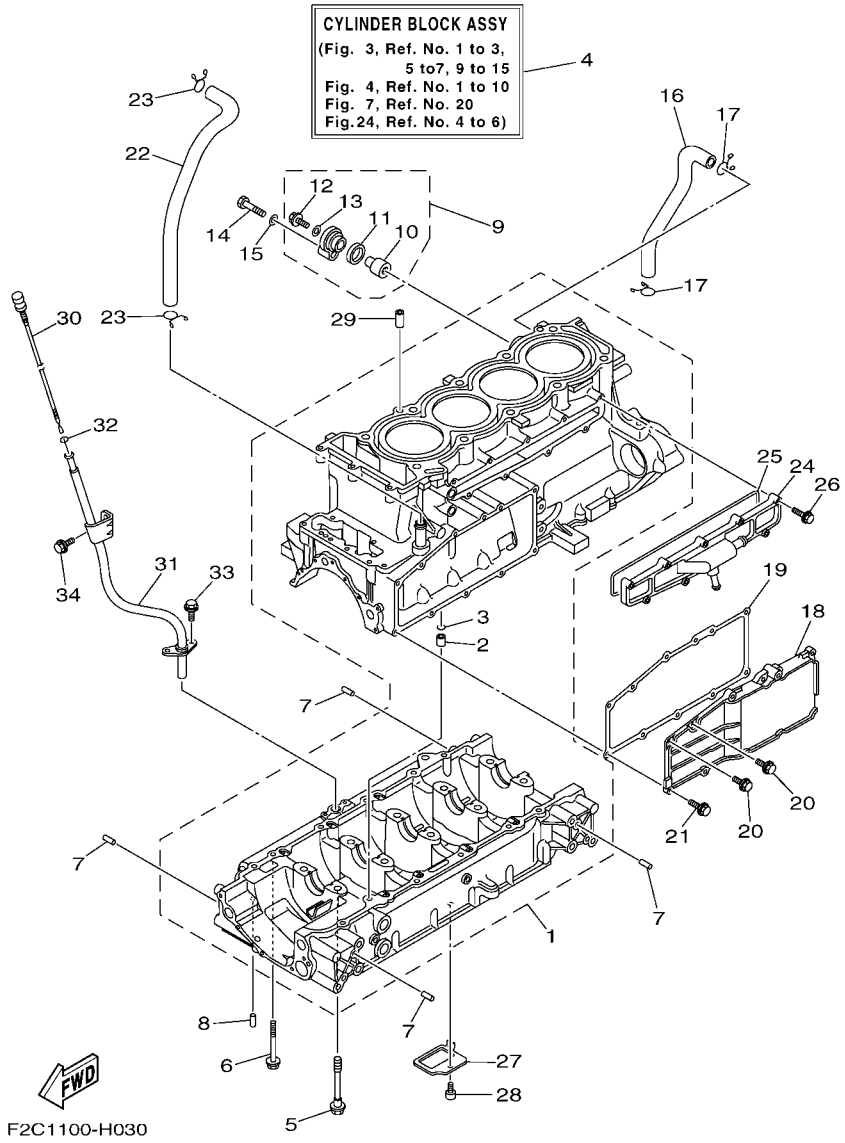

FIG. 3 CRANKCASE

REF. NO.	PART NO.	DESCRIPTION	CAN	EUR	GENE			REMARKS
28	90110–06182	BOLT, HEXAGON SOCKET HEAD	1	1	1			
29	99530–10114	PIN, DOWEL	2	2	2			
30	6S5–15362–00	PLUG, OIL LEVEL	1	1	1			
31	6S5–8572F–01	PIPE, OIL LEVEL	1	1	1			
32	93210–12790	O-RING	1	1	1			
33	95880–06014	BOLT, FLANGE	1	1	1			
34	95023–06012	BOLT	1	1	1			

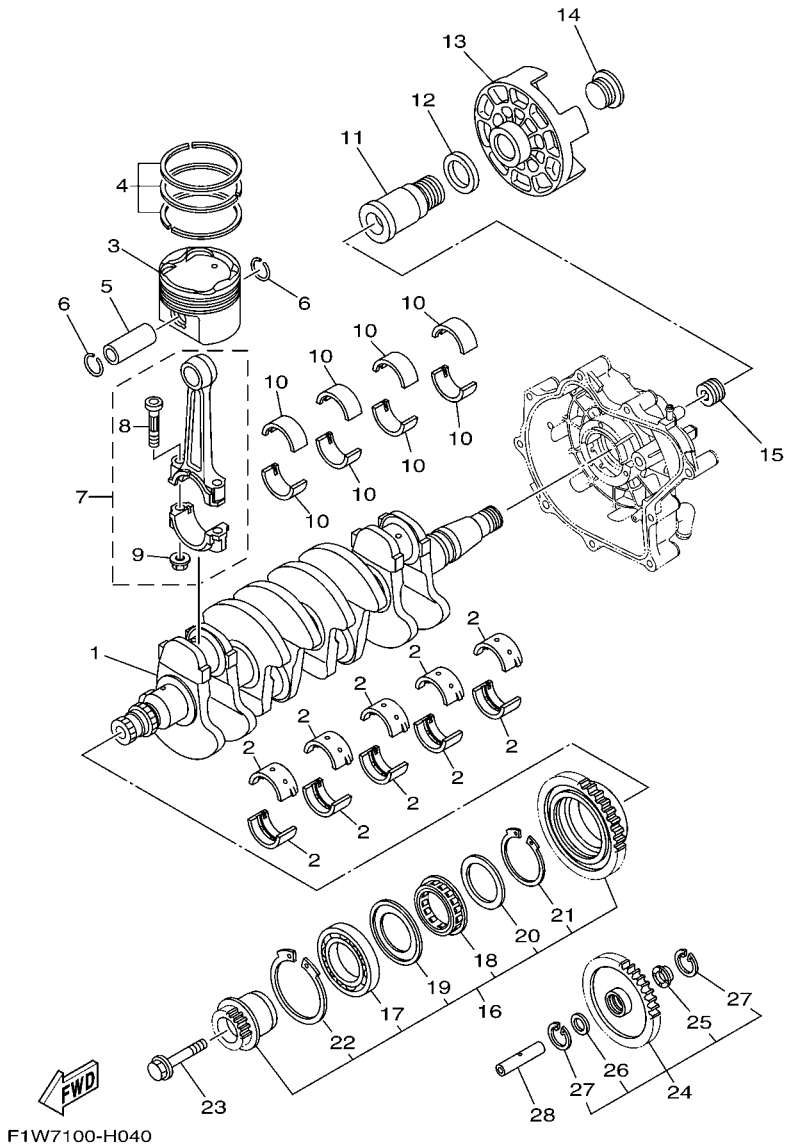

FIG. 4 CRANKSHAFT & PISTON

REF. NO.	PART NO.	DESCRIPTION	CAN	EUR	GENE			REMARKS
1	6S5–11411–00	CRANKSHAFT	1	1	1			
2	6S5–11416–00	PLANE BEARING, CRANKSHAFT 1	10	10	10			UR BROWN
	6S5–11416–10	PLANE BEARING, CRANKSHAFT 1	10	10	10			UR BLACK
	6S5–11416–20	PLANE BEARING, CRANKSHAFT 1	10	10	10			UR BLUE
	6S5–11416–30	PLANE BEARING, CRANKSHAFT 1	10	10	10			UR GREEN
	6S5–11416–40	PLANE BEARING, CRANKSHAFT 1	10	10	10			UR YELLOW
3	6S5–11631–10–B0	PISTON (STD)	4	4	4			
4	6S5–11603–00	PISTON RING SET (STD)	4	4	4			
5	6S5–11633–00	PIN, PISTON	4	4	4			
6	93450–24028	CIRCLIP	8	8	8			
7	6S5–11650–00	CONNECTING ROD ASSY	4	4	4			
8	6S5–11654–00	.BOLT, CONNECTING ROD	2	2	2			
9	90179–09379	.NUT	2	2	2			
10	6S5–11656–00	PLANE BEARING, CONNECTING ROD	8	8	8			UR BROWN
	6S5–11656–10	PLANE BEARING, CONNECTING ROD	8	8	8			UR BLACK
	6S5–11656–20	PLANE BEARING, CONNECTING ROD	8	8	8			UR BLUE
	6S5–11656–30	PLANE BEARING, CONNECTING ROD	8	8	8			UR GREEN
11	6S5–17572–01	SHAFT, TRANSFER	1	1	1			
12	6S5–12289–00	WASHER	1	1	1			
13	6S5–45813–01–94	FLANGE, COUPLING	1	1	1			
14	6S5–17525–01	HOLDER 2	1	1	1			
15	6S5–11459–00	NUT, SPECIAL	1	1	1			
16	6S5–17800–00	GEAR UNIT ASSY, TACHO. DRIVE	1	1	1			
17	93316–00901	.BEARING	1	1	1			
18	6S5–15657–00	.CLUTCH, ONEWAY	1	1	1			
19	6S5–17648–00	.WASHER	1	1	1			
20	6S5–17658–00	.WASHER	1	1	1			

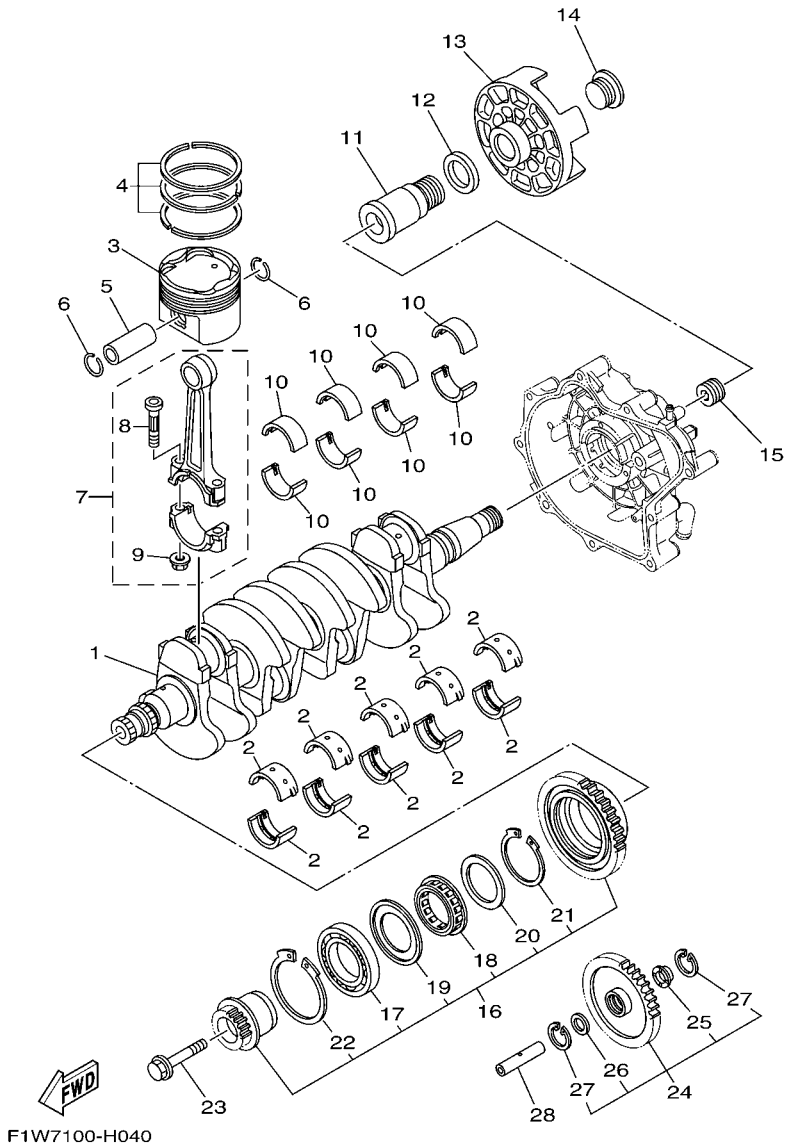

FIG. 4 CRANKSHAFT & PISTON

REF. NO.	PART NO.	DESCRIPTION	CAN	EUR	GENE			REMARKS
21	93450–63160	.CIRCLIP	1	1	1			
22	93450–75161	.CIRCLIP	1	1	1			
23	6S5–17031–00	BOLT	1	1	1			
24	6S5–W1783–10	DRIVE GEAR & COLLAR SET	1	1	1			
25	6S5–17529–00	.WASHER, THRUST	1	1	1			
26	90201–132G5	.WASHER, PLATE	1	1	1			
27	99009–24700	.CIRCLIP	2	2	2			
28	6S5–17553–00	SHAFT, MIDDLE DRIVEN	1	1	1			

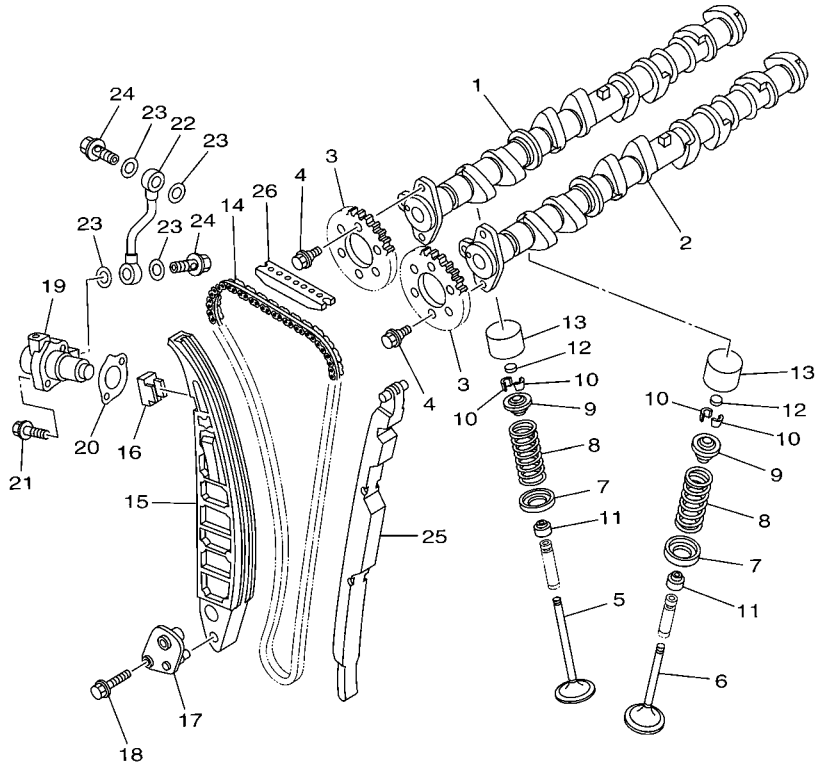

F1W1100-G050

FIG. 5 VALVE

REF. NO.	PART NO.	DESCRIPTION	CAN	EUR	GENE			REMARKS
1	6S5–12171–00	CAMSHAFT 1	1	1	1			
2	6S5–12181–00	CAMSHAFT 2	1	1	1			
3	6D3–12176–00	SPROCKET, CAM CHAIN	2	2	2			
4	90105–07004	BOLT, FLANGE	4	4	4			
5	6S5–12111–00	VALVE, INTAKE	8	8	8			
6	6S5–12121–00	VALVE, EXHAUST	8	8	8			
7	6S5–12116–00	SEAT, VALVE SPRING	16	16	16			
8	6S5–12113–00	SPRING, VALVE INNER	16	16	16			
9	6S5–12117–00	RETAINER, VALVE SPRING	16	16	16			
10	3LD–12118–00	COTTER, VALVE	32	32	32			
11	51Y–12119–00	SEAL, VALVE STEM	16	16	16			
12	3LD–12168–00	PAD, ADJUSTING (1.20)	16	16	16			UR
	3LD–12168–20	PAD, ADJUSTING (1.25)	16	16	16			UR
	3LD–12168–40	PAD, ADJUSTING (1.30)	16	16	16			UR
	3LD–12168–60	PAD, ADJUSTING (1.35)	16	16	16			UR
	3LD–12168–80	PAD, ADJUSTING (1.40)	16	16	16			UR
	3LD–12168–A0	PAD, ADJUSTING (1.45)	16	16	16			UR
	3LD–12168–F0	PAD, ADJUSTING (1.50)	16	16	16			UR
	3LD–12168–H1	PAD, ADJUSTING (1.55)	16	16	16			UR
	3LD–12168–K1	PAD, ADJUSTING (1.60)	16	16	16			UR
	3LD–12168–M1	PAD, ADJUSTING (1.65)	16	16	16			UR
	3LD–12168–R1	PAD, ADJUSTING (1.70)	16	16	16			UR
	3LD–12168–U1	PAD, ADJUSTING (1.75)	16	16	16			UR
	3LD–12168–W1	PAD, ADJUSTING (1.80)	16	16	16			UR
	3LD–12168–Y1	PAD, ADJUSTING (1.85)	16	16	16			UR
	3LD–12169–11	PAD, ADJUSTING (1.90)	16	16	16			UR
	3LD–12169–31	PAD, ADJUSTING (1.95)	16	16	16			UR

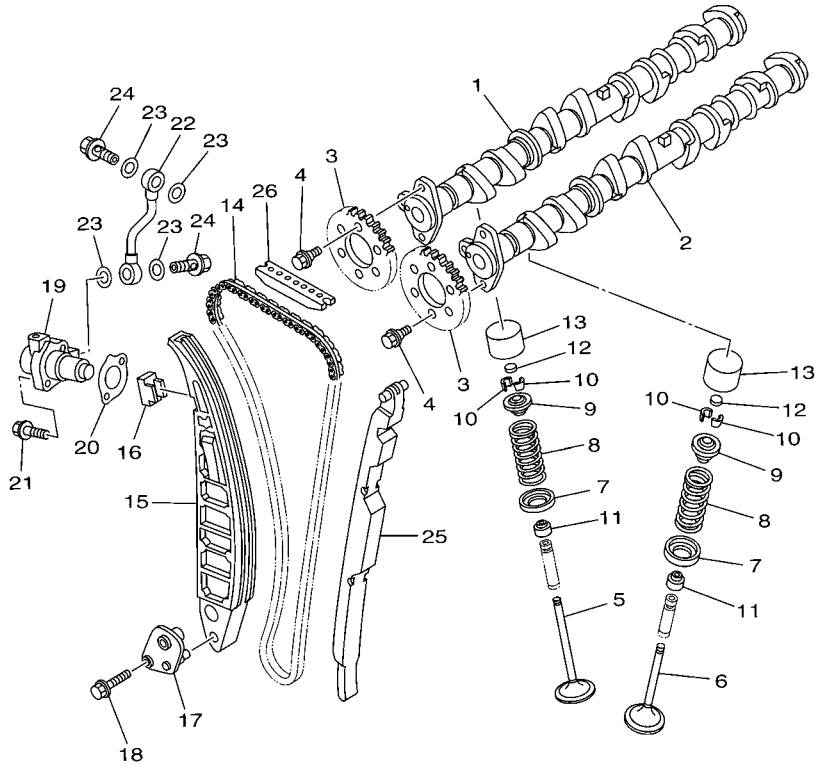

F1W1100-G050

FIG. 5 VALVE

REF. NO.	PART NO.	DESCRIPTION	CAN	EUR	GENE			REMARKS
12	3LD–12169–50	PAD, ADJUSTING (2.00)	16	16	16			UR
	3LD–12169–70	PAD, ADJUSTING (2.05)	16	16	16			UR
	3LD–12169–90	PAD, ADJUSTING (2.10)	16	16	16			UR
	3LD–12169–E0	PAD, ADJUSTING (2.15)	16	16	16			UR
	3LD–12169–G0	PAD, ADJUSTING (2.20)	16	16	16			UR
	3LD–12169–J0	PAD, ADJUSTING (2.25)	16	16	16			UR
	3LD–12169–L0	PAD, ADJUSTING (2.30)	16	16	16			UR
13	6S5–12153–00	LIFTER, VALVE	16	16	16			
14	94591–66152	CHAIN	1	1	1			
15	6S5–12252–00	DAMPER, CHAIN 2	1	1	1			
16	6S5–12215–00	CAP, TENSIONER CASE	1	1	1			
17	6S5–12279–00	PLATE	1	1	1			
18	95814–06030	BOLT, FLANGE	2	2	2			
19	6S5–12210–00	TENSIONER ASSY, CAM CHAIN	1	1	1			
20	6S5–121E2–00	GASKET	1	1	1			
21	91380–06025	BOLT	2	2	2			
22	6S5–13418–00	PIPE, OIL 2	1	1	1			
23	90430–10007	GASKET	4	4	4			
24	90401–10040	BOLT, UNION	2	2	2			
25	6S5–12251–00	DAMPER, CHAIN 1	1	1	1			
26	6S5–12241–00	GUIDE, STOPPER 2	1	1	1			

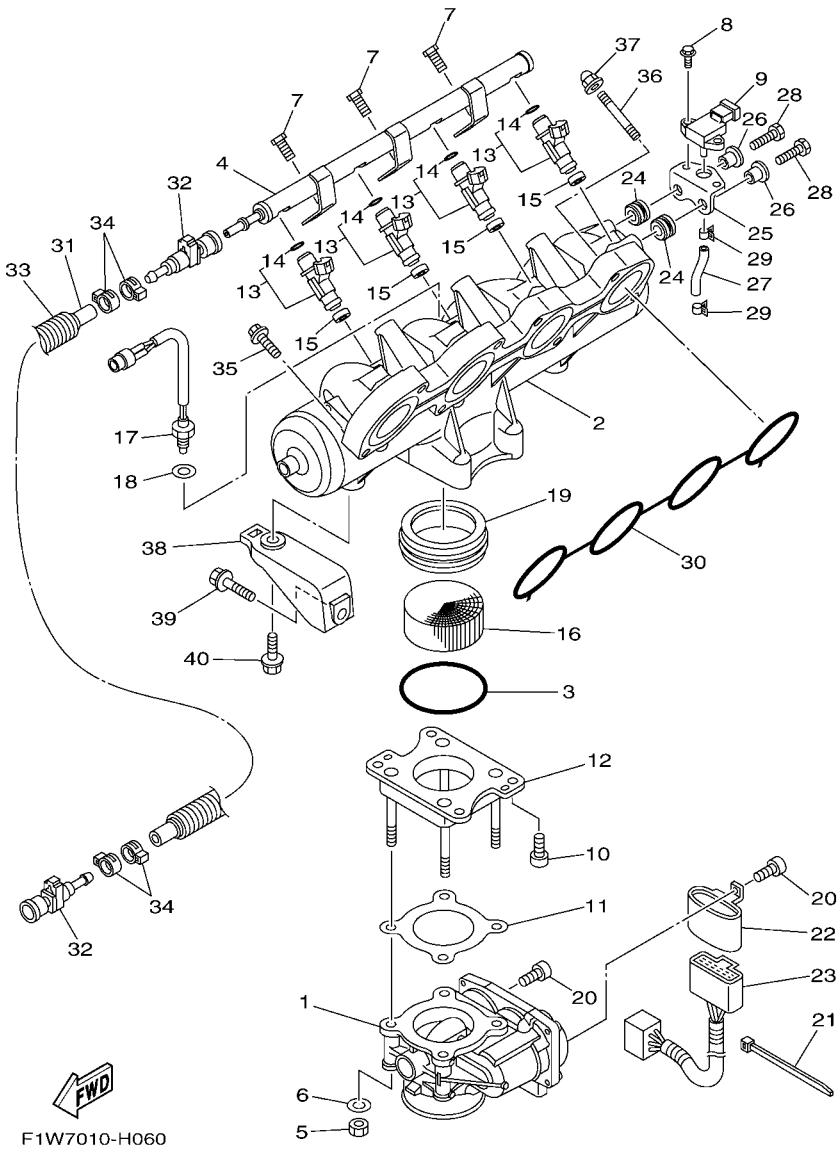

FIG. 6 INTAKE 1

REF. NO.	PART NO.	DESCRIPTION	CAN	EUR	GENE			REMARKS
1	6S5–13750–00	THROTTLE BODY ASSY	1	1	1			
2	6S5–13641–00	MANIFOLD 1	1	1	1			
3	6S5–14147–00	O-RING	1	1	1			
4	6S5–12880–00	DELIVERY PIPE	1	1	1			
5	6P2–13588–00	NUT	4	4	4			
6	6P2–13578–00	WASHER	4	4	4			
7	63P–14446–00	BOLT	3	3	3			
8	6S5–13573–00	BOLT 1	2	2	2			
9	6S5–82380–00	SENSOR, PRESSURE	1	1	1			
10	6S5–14496–00	BOLT	4	4	4			
11	6S5–14536–00	GASKET	1	1	1			
12	6S5–14360–00	THROTTLE DAMPER ASSY	1	1	1			
13	6S5–13761–00	INJECTOR	4	4	4			
14	60E–14147–00	.O-RING	1	1	1			
15	8FP–13556–00	GASKET, MANIFOLD	4	4	4			
16	6D3–1444B–00	RIBBON	1	1	1			
17	6S5–85886–00	SENSOR, AIR TEMPERATURE	1	1	1			
18	6S5–14285–00	WASHER	1	1	1			
19	6D3–14457–00	SEAL	1	1	1			
20	6S5–14216–00	SCREW	2	2	2			
21	6S5–81128–00	CLAMP	1	1	1			
22	6S5–13881–00	COVER 1	1	1	1			
23	6S5–82509–00	WIRE, SUB LEAD	1	1	1			
24	6S5–14445–00	GROMMET	2	2	2			
25	6S5–14291–00	BRACKET 1	1	1	1			
26	6S5–14534–00	COLLAR	2	2	2			
27	69J–13532–00	HOSE, VACUUM SENSING 3	1	1	1			

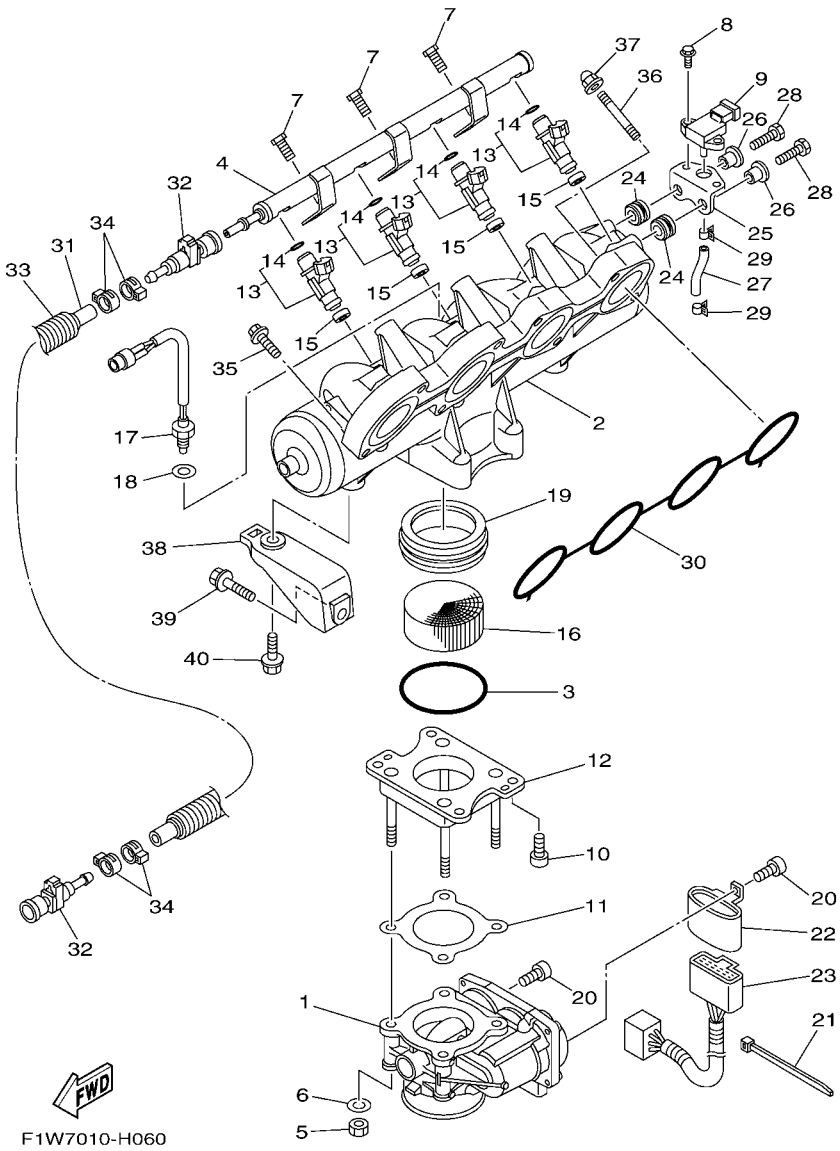

FIG. 6 INTAKE 1

REF. NO.	PART NO.	DESCRIPTION	CAN	EUR	GENE			REMARKS
28	6S5–14446–00	BOLT	2	2	2			
29	6S5–14159–00	CLIP	2	2	2			
30	6S5–13645–00	GASKET, MANIFOLD 1	1	1	1			
31	6AN–14294–01	HOSE	1	1	1			
32	6S5–24300–01	FUEL PIPE JOINT	2	2	2			
33	90447–19017	TUBE	1	1	1			
34	90450–17M17	HOSE CLAMP ASSY	4	4	4			
35	90119–08022	BOLT, WITH WASHER	6	6	6			
36	90116–08032	BOLT, STUD	2	2	2			
37	90176–08080	NUT, CROWN	2	2	2			
38	6S5–14413–00–94	STAY	2	2	2			
39	90119–08043	BOLT, WITH WASHER	2	2	2			
40	90119–08099	BOLT, WITH WASHER	2	2	2			

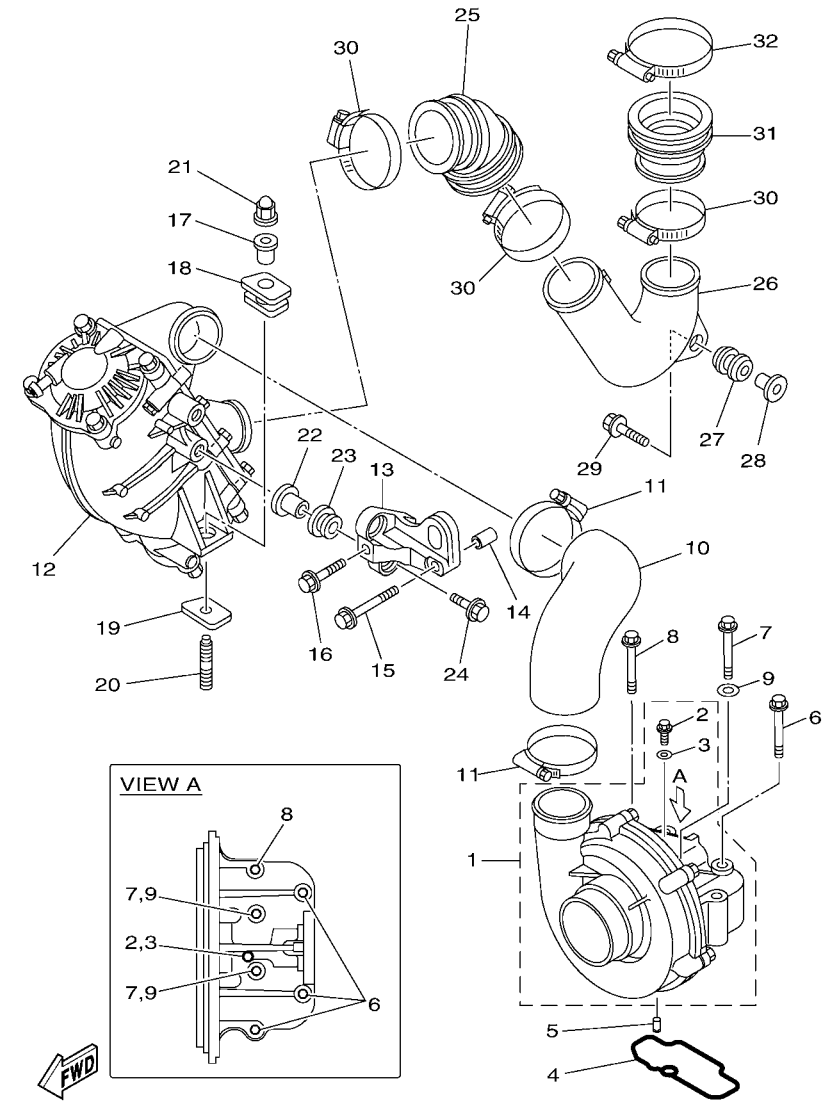

F1W7010-H070

FIG. 7 INTAKE 2

REF. NO.	PART NO.	DESCRIPTION	CAN	EUR	GENE			REMARKS
1	6S5–141A0–00	SUPER CHARGER ASSY	1	1	1			
2	90105–05020	.BOLT, FLANGE	1	1	1			
3	6S5–14199–00	.GASKET	1	1	1			
4	6S5–1416A–00	O-RING	1	1	1			
5	93604–10M03	PIN, DOWEL	2	2	2			
6	95814–08065	BOLT, FLANGE	3	3	3			
7	95814–06065	BOLT, FLANGE	2	2	2			
8	90105–08188	BOLT, FLANGE	1	1	1			
9	90201–06028	WASHER, PLATE	2	2	2			
10	6S5–14349–00	PIPE	1	1	1			
11	90450–75003	HOSE CLAMP ASSY	2	2	2			
12	6S5–13670–00	AIR COORER ASSY.	1	1	1			
13	6S5–13691–00–94	BRACKET, AIR COOLER	1	1	1			
14	99590–14016	PIN, DOWEL	2	2	2			
15	90119–10047	BOLT, WITH WASHER	1	1	1			
16	90119–10046	BOLT, WITH WASHER	1	1	1			
17	6S5–14495–00	COLLAR	1	1	1			
18	6S5–14435–00	GROMMET	1	1	1			
19	6S5–14243–00	PLATE	1	1	1			
20	90116–10044	BOLT, STUD	1	1	1			
21	90176–10001	NUT, CROWN	1	1	1			
22	90387–11002	COLLAR	2	2	2			
23	90480–21M63	GROMMET	2	2	2			
24	90119–10011	BOLT, WITH WASHER	2	2	2			
25	6S5–14148–00	PIPE	1	1	1			
26	6S5–13651–00	PIPE, BOOST	1	1	1			
27	90480–22M15	GROMMET	1	1	1			

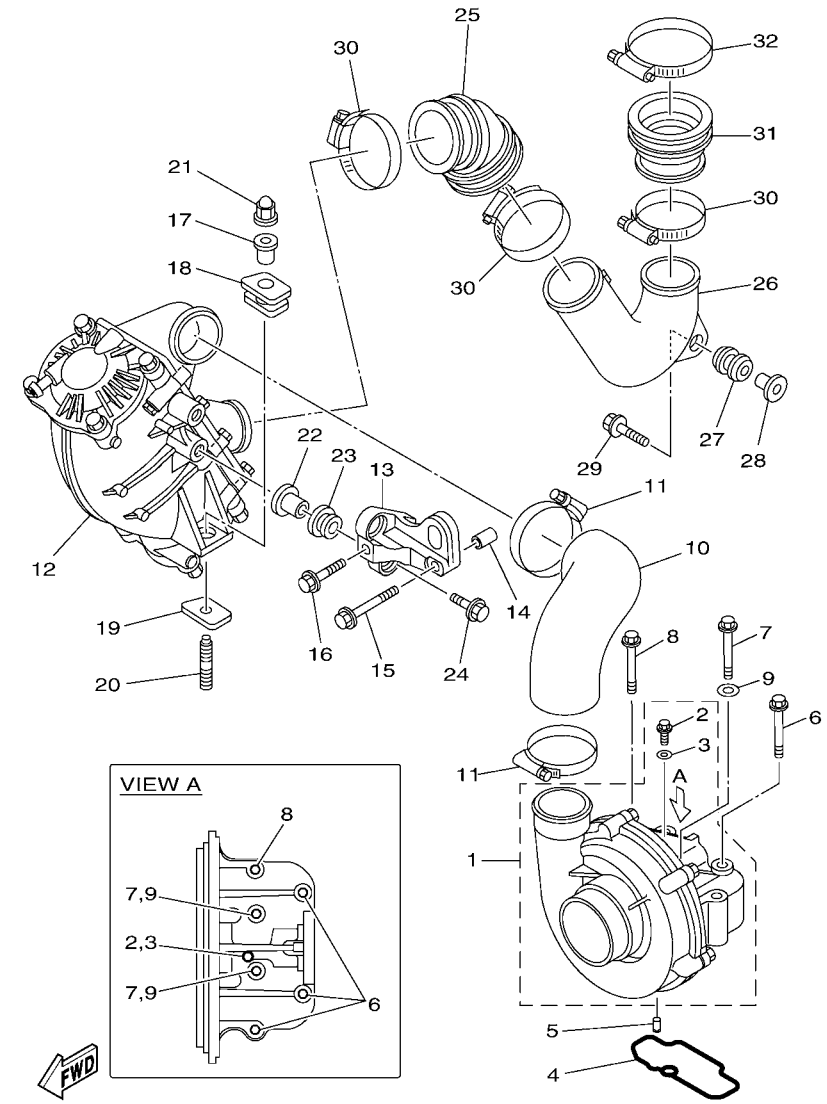

F1W7010-H070

FIG. 7 INTAKE 2

REF. NO.	PART NO.	DESCRIPTION	CAN	EUR	GENE			REMARKS
28	6D3–14495–00	COLLAR	1	1	1			
29	90119–08M22	BOLT, WITH WASHER	1	1	1			
30	90450–70005	HOSE CLAMP ASSY	3	3	3			
31	6S5–13652–00	PIPE, INTAKE	1	1	1			
32	90450–70M13	HOSE CLAMP ASSY	1	1	1			

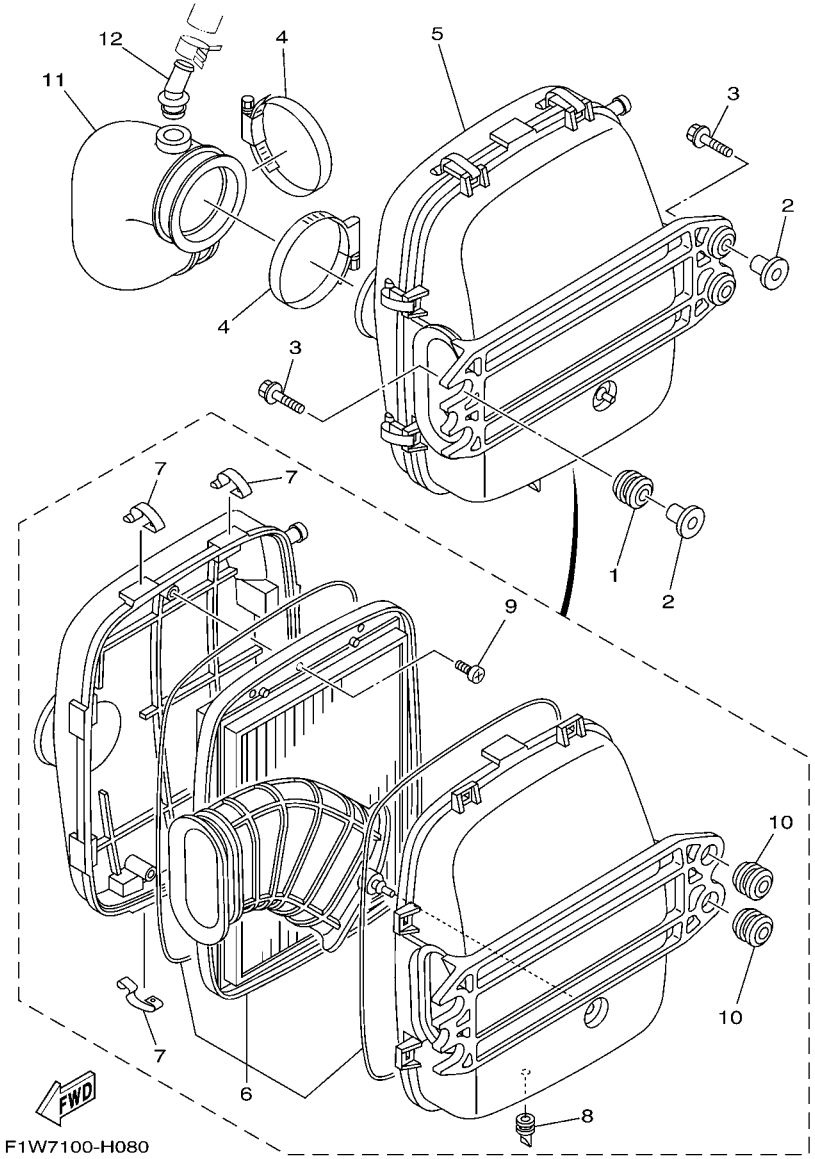

FIG. 8 INTAKE 3

REF. NO.	PART NO.	DESCRIPTION	CAN	EUR	GENE			REMARKS
1	90480–22M15	GROMMET	2	2	2			
2	6D3–14495–00	COLLAR	4	4	4			
3	90119–08M22	BOLT, WITH WASHER	4	4	4			
4	90460–90M11	CLAMP, HOSE	2	2	2			
5	6S5–E4410–01	AIR CLEANER ASSY.	1	1	1			
6	6S5–E4451–00	.ELEMENT, AIR CLEANER	1	1	1			
7	6S5–E4436–00	.HOOK	8	8	8			
8	6S5–G2717–00	.RUBBER, SEAL 2	1	1	1			
9	97780–60516	.SCREW, TAPPING	3	3	3			
10	90480–22801	.GROMMET	2	2	2			
11	6S5–E4419–00	PIPE	1	1	1			
12	6S5–R1142–00	CONNECTION	1	1	1			

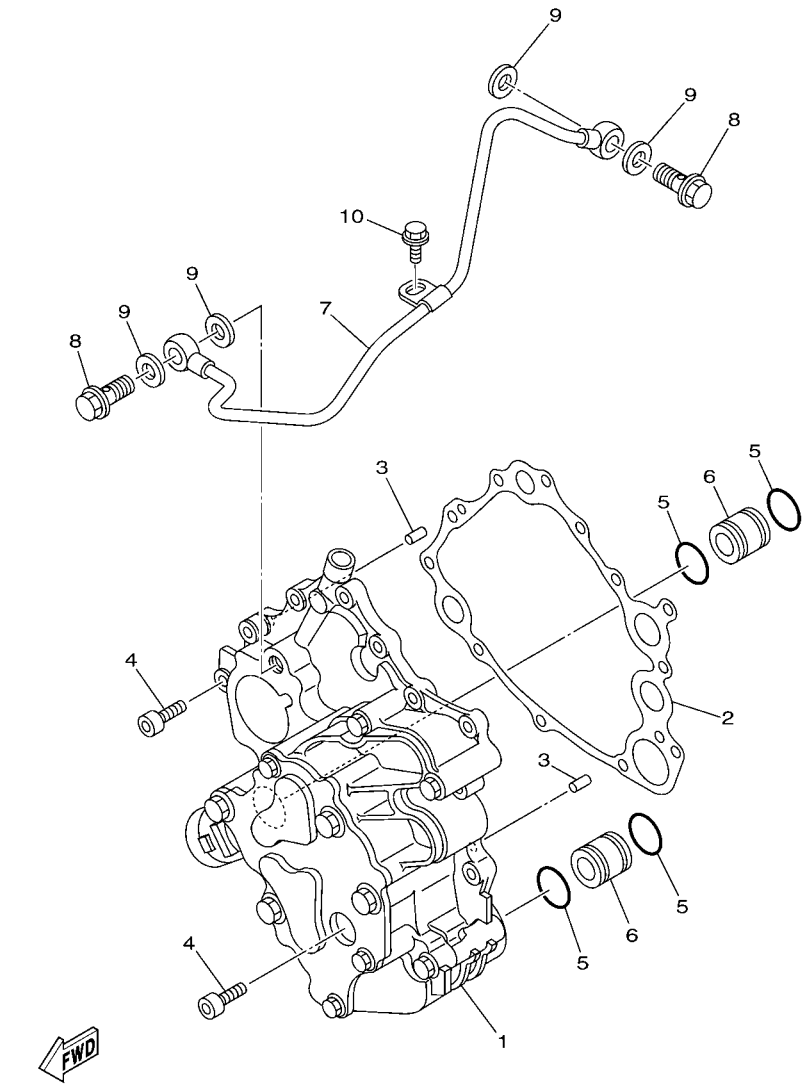

F1W1100-G090

FIG. 9 OIL PUMP

REF. NO.	PART NO.	DESCRIPTION	CAN	EUR	GENE			REMARKS
1	6S5–13300–00	OIL PUMP ASSY	1	1	1			
2	6S5–13563–00	GASKET	1	1	1			
3	93606–12019	PIN, DOWEL	2	2	2			
4	91314–06020	BOLT, HEXAGON SOCKET HEAD	12	12	12			
5	93210–21631	O-RING	4	4	4			
6	60E–13446–00	CONNECTOR	2	2	2			
7	6S5–13416–00	PIPE, OIL 1	1	1	1			
8	90401–10040	BOLT, UNION	2	2	2			
9	90430–10007	GASKET	4	4	4			
10	95023–06012	BOLT	1	1	1			

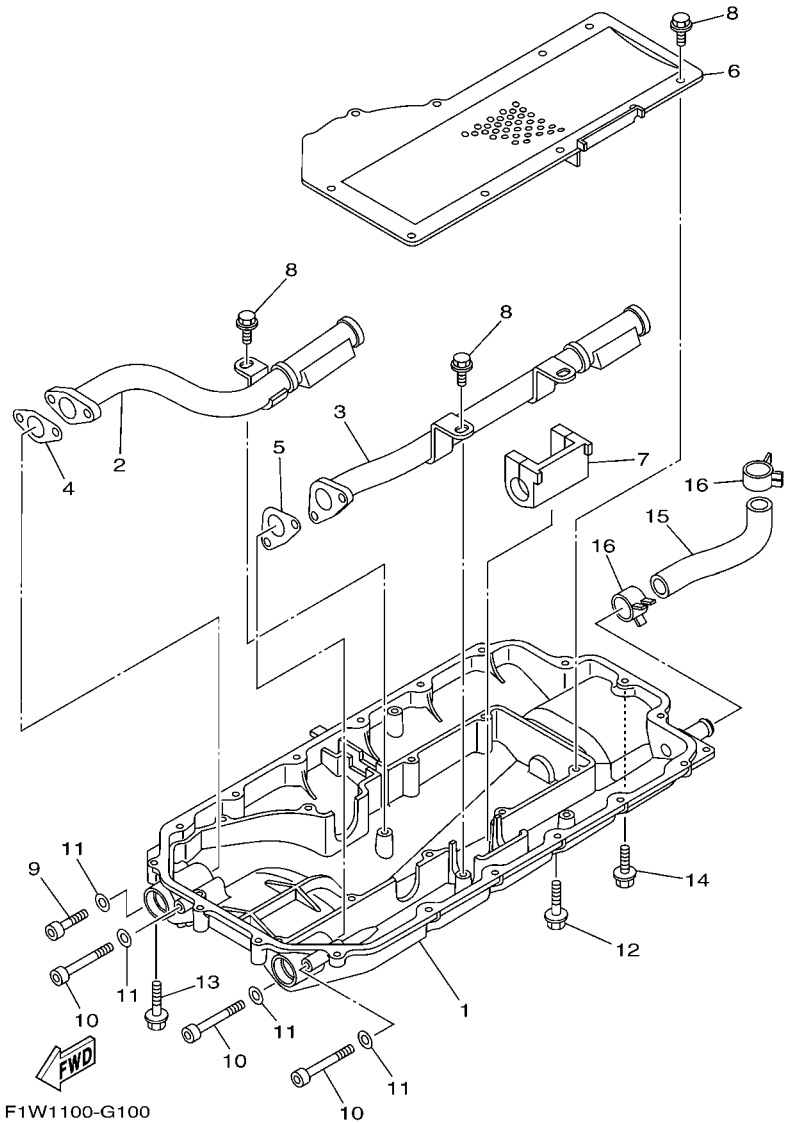

FIG. 10 OIL PAN

REF. NO.	PART NO.	DESCRIPTION	CAN	EUR	GENE			REMARKS
1	6S5–1310A–00–94	PAN, OIL	1	1	1			
2	6S5–13405–00	OIL PIPE COMP. 1	1	1	1			
3	6S5–13406–00	OIL PIPE COMP. 2	1	1	1			
4	6S5–13476–00	GASKET	1	1	1			
5	6S5–13477–00	GASKET	1	1	1			
6	6S5–13317–00	PLATE, BAFFLE	1	1	1			
7	6S5–15486–00	GROMMET	1	1	1			
8	95817–06014	BOLT, FLANGE	13	13	13			
9	91314–06035	BOLT, HEXAGON SOCKET HEAD	1	1	1			
10	91314–06060	BOLT, HEXAGON SOCKET HEAD	3	3	3			
11	90201–06028	WASHER, PLATE	4	4	4			
12	95024–06035	BOLT, FLANGE	16	16	16			
13	95024–06030	BOLT, FLANGE	1	1	1			
14	95024–06020	BOLT, FLANGE	1	1	1			
15	6S5–11378–00	HOSE 2	1	1	1			
16	90467–200A0	CLIP	2	2	2			

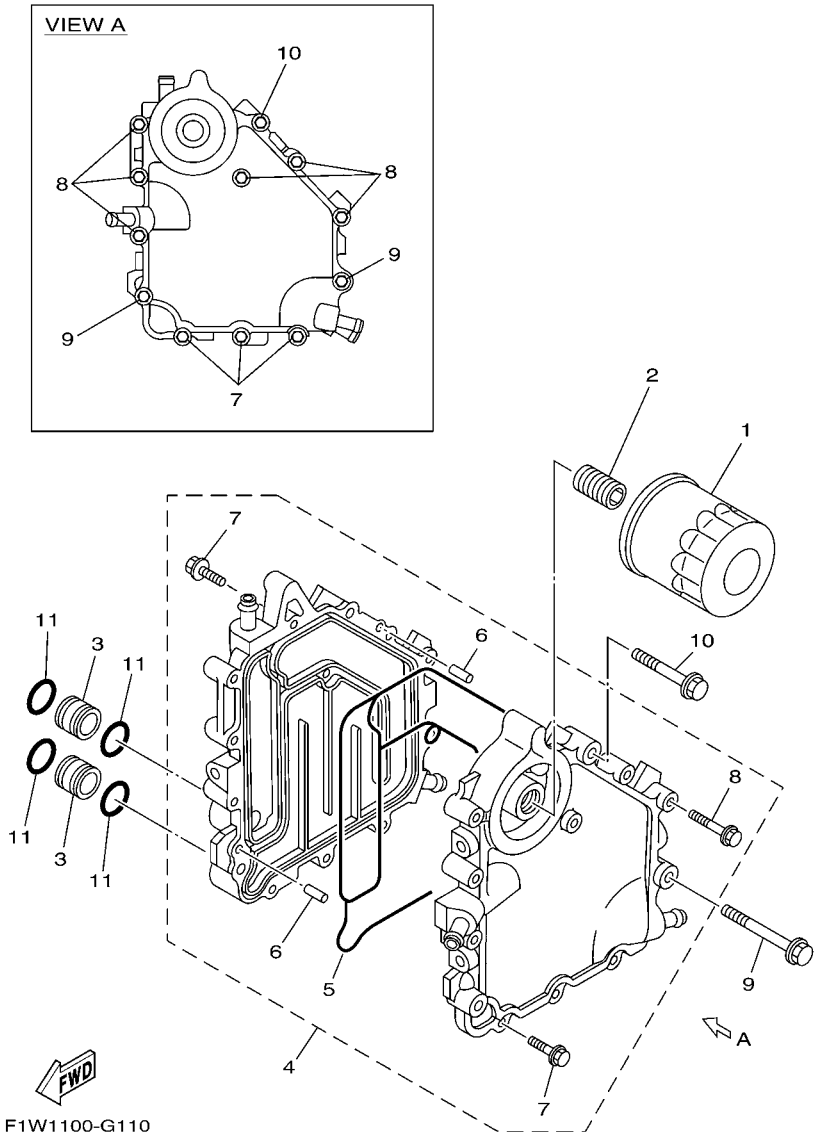

FIG. 11 OIL COOLER

REF. NO.	PART NO.	DESCRIPTION	CAN	EUR	GENE			REMARKS
1	69J–13440–01	ELEMENT ASSY, OIL CLEANER	1	1	1			
2	6S5–12858–00	BOLT, UNION	1	1	1			
3	6S5–13446–00	CONNECTOR	2	2	2			
4	6S5–13470–00	OIL COOLER ASSY	1	1	1			
5	6S5–13556–00	.GASKET, MANIFOLD	1	1	1			
6	93604–10M03	.PIN, DOWEL	2	2	2			
7	90105–06M24	.BOLT, FLANGE	4	4	4			
8	90105–06M16	.BOLT, FLANGE	6	6	6			
9	90105–08169	BOLT, FLANGE	2	2	2			
10	90105–08170	BOLT, FLANGE	1	1	1			
11	93210–18322	O-RING	4	4	4			

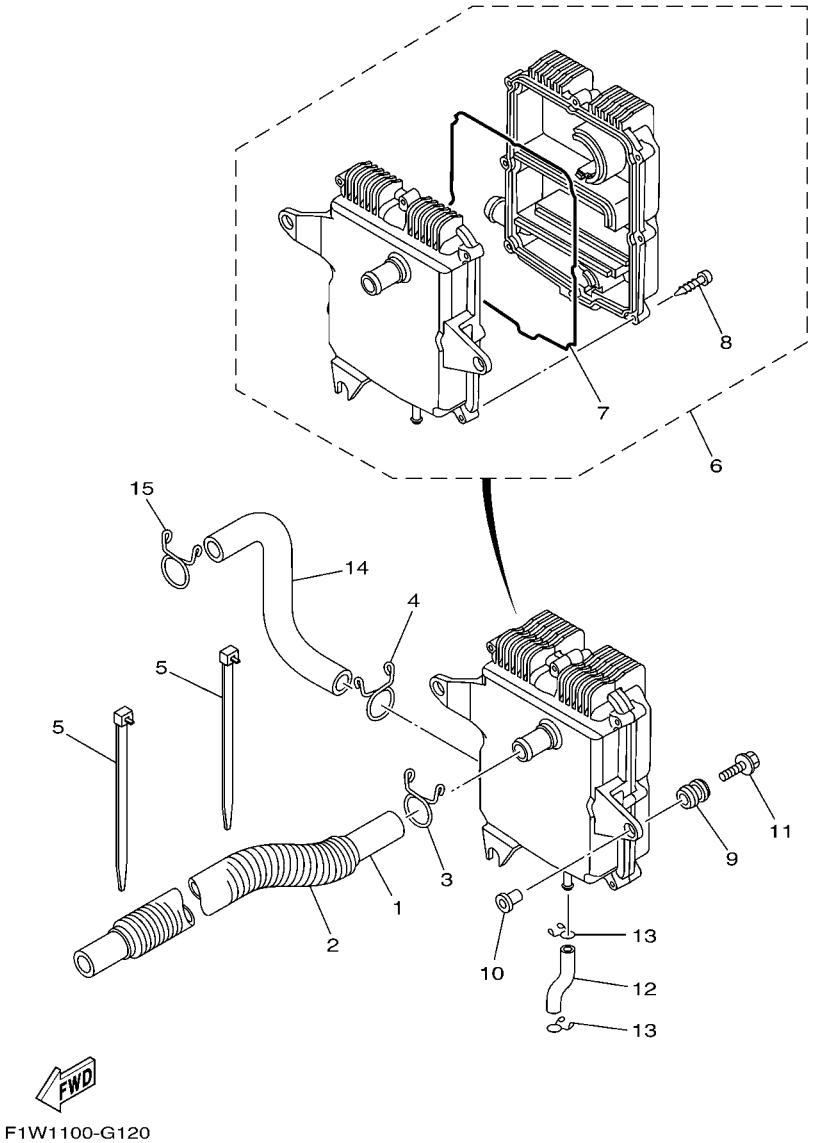

FIG. 12 BREATHER OIL

REF. NO.	PART NO.	DESCRIPTION	CAN	EUR	GENE			REMARKS
1	6S5–11166–00	PIPE, BREATHER 1	1	1	1			
2	90446–30MF1	HOSE (L600)	1	1	1			
3	90467–240A2	CLIP	1	1	1			
4	90467–240A2	CLIP	1	1	1			
5	90465–14M66	CLAMP	2	2	2			
6	6S5–11160–00	BREATHER ASSY	1	1	1			
7	93212–02001	.O-RING	1	1	1			
8	97780–60530	.SCREW, TAPPING	8	8	8			
9	61N–82317–00	DAMPER, IGNITION COIL	3	3	3			
10	90387–06119	COLLAR	3	3	3			
11	95824–06030	BOLT, FLANGE	3	3	3			
12	6S5–11125–00	PIPE, BREATHER 4	1	1	1			
13	90467–11019	CLIP	2	2	2			
14	6S5–11167–00	PIPE, BREATHER 2	1	1	1			
15	90467–240A2	CLIP	2	2	2			

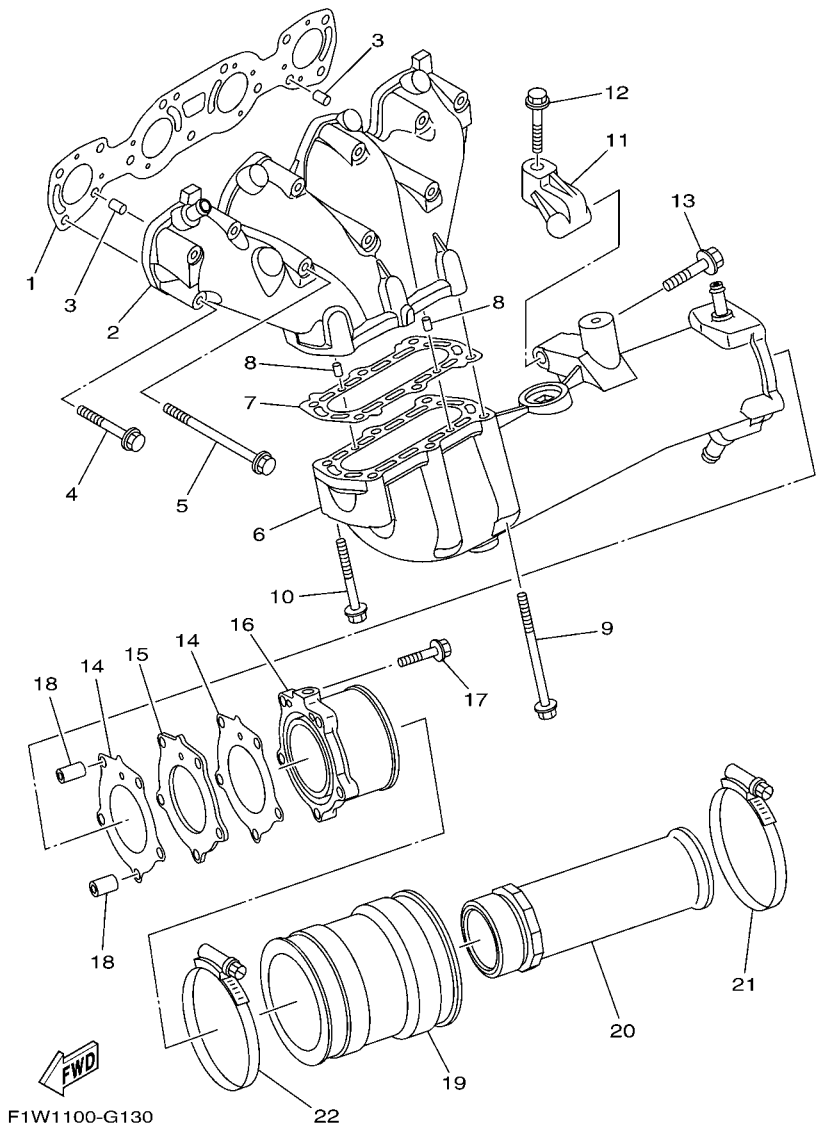

FIG. 13 EXHAUST 1

REF. NO.	PART NO.	DESCRIPTION	CAN	EUR	GENE			REMARKS
1	6S5–14613–00	GASKET, EXHAUST PIPE	1	1	1			
2	6S5–14711–00–94	MUFFLER 1	1	1	1			
3	93608–16M16	PIN, DOWEL	2	2	2			
4	90119–08034	BOLT, WITH WASHER	8	8	8			
5	90119–08097	BOLT, WITH WASHER	3	3	3			
6	6S5–14721–00–94	MUFFLER 2	1	1	1			
7	6S5–14739–00	GASKET, MUFFLER DAMPER 1	1	1	1			
8	93606–12019	PIN, DOWEL	2	2	2			
9	90119–08097	BOLT, WITH WASHER	4	4	4			
10	90119–08034	BOLT, WITH WASHER	2	2	2			
11	6S5–14771–00–94	STAY, MUFFLER 1	1	1	1			
12	90119–08096	BOLT, WITH WASHER	1	1	1			
13	90119–10029	BOLT, WITH WASHER	1	1	1			
14	6S5–14749–00	GASKET, MUFFLER DAMPER 2	2	2	2			
15	6S5–1469W–00	PLATE, SILENCER 6	1	1	1			
16	6S5–14784–00–94	PIPE, TAIL	1	1	1			
17	95024–08035	BOLT, FLANGE	5	5	5			
18	99590–10114	PIN, DOWEL	2	2	2			
19	6S5–14752–00	PIPE, OUTLET	1	1	1			
20	6S5–1475A–00	PIPE 1	1	1	1			
21	90450–99M06	HOSE CLAMP ASSY	1	1	1			
22	90450–90M10	HOSE CLAMP ASSY	1	1	1			

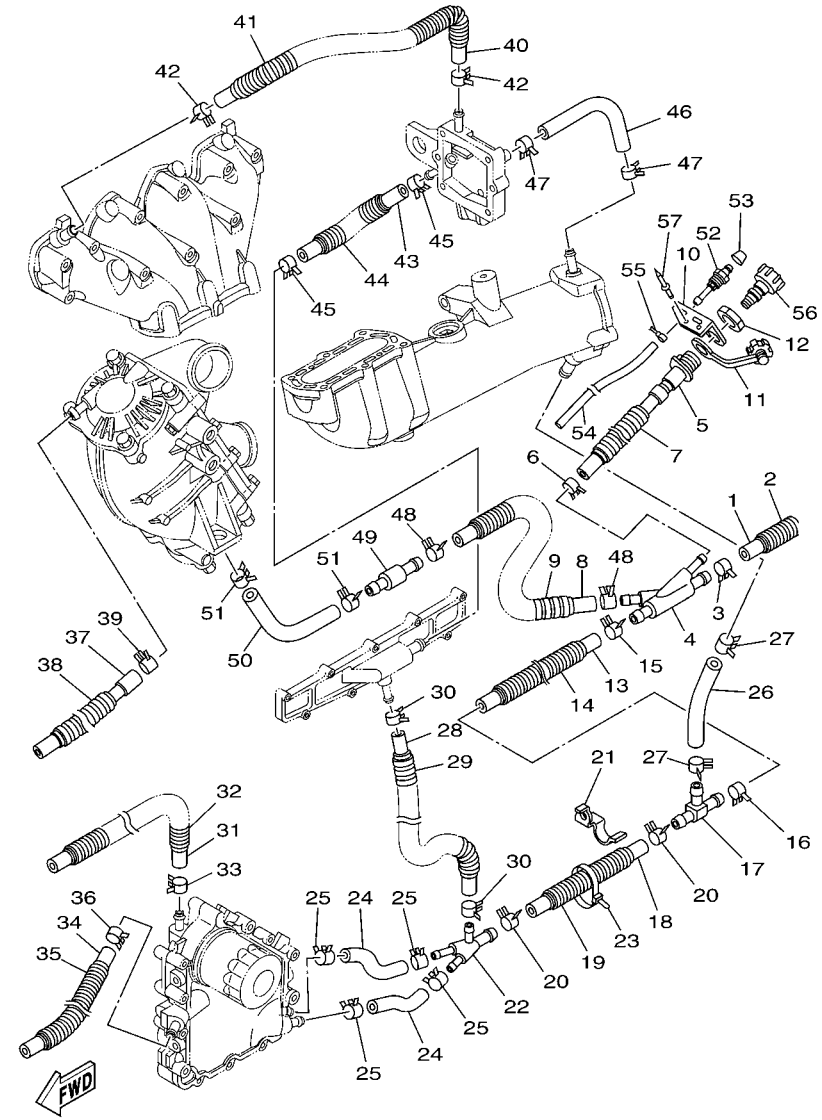

F1W1100-G140

FIG. 14 EXHAUST 2

REF. NO.	PART NO.	DESCRIPTION	CAN	EUR	GENE			REMARKS
1	90445–21813	HOSE(L285)	1	1	1			
2	90447–22801	TUBE(L200)	1	1	1			
3	90467–200A0	CLIP	1	1	1			
4	6S5–12581–00	JOINT, HOSE 1	1	1	1			
5	63M–12580–00	JOINT ASSY	1	1	1			
6	90467–150A0	CLIP	1	1	1			
7	90447–19801	TUBE(L485)	1	1	1			
8	90445–21807	HOSE(L970)	1	1	1			
9	90447–22802	TUBE(L850)	1	1	1			
10	6S5–12443–00	STAY	1	1	1			
11	682–84385–01	CAP,1	1	1	1			
12	EU0–61652–00	NUT	1	1	1			
13	6S5–1243E–00	HOSE 2	1	1	1			
14	90447–22011	TUBE (L170)	1	1	1			
15	90467–200A0	CLIP	1	1	1			
16	90467–200A0	CLIP	1	1	1			
17	6S5–12584–00	JOINT, HOSE 3	1	1	1			
18	6S5–1243F–00	HOSE,3	1	1	1			
19	90447–22013	TUBE(L140)	1	1	1			
20	90467–200A0	CLIP	2	2	2			
21	90462–10044	CLAMP	1	1	1			
22	6S5–12582–00	JOINT, HOSE 2	1	1	1			
23	90464–35132	CLAMP	1	1	1			
24	6S5–1244J–00	HOSE 6	2	2	2			
25	90467–160A0	CLIP	4	4	4			
26	6S5–12589–00	HOSE 6	1	1	1			
27	90467–200A0	CLIP	2	2	2			

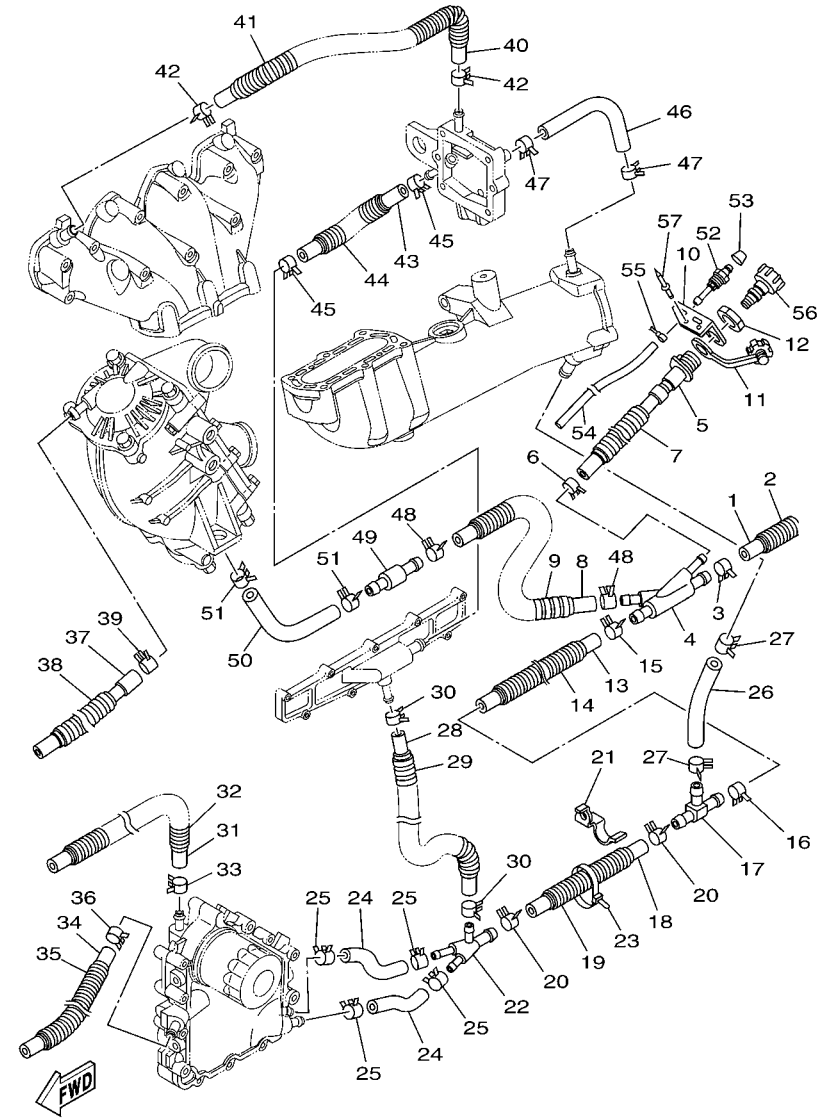

F1W1100-G140

FIG. 14 EXHAUST 2

REF. NO.	PART NO.	DESCRIPTION	CAN	EUR	GENE			REMARKS
28	6S5–1244H–00	HOSE 5	1	1	1			
29	90447–19011	TUBE(L150)	1	1	1			
30	90467–150A1	CLIP	2	2	2			
31	6S5–12588–00	HOSE 5	1	1	1			
32	90447–19006	HOSE, WITH SPRING (L=630)	1	1	1			
33	90467–160A0	CLIP	1	1	1			
34	6S5–14987–00	HOSE	1	1	1			
35	90447–19006	HOSE, WITH SPRING (L=630)	1	1	1			
36	90467–160A0	CLIP	1	1	1			
37	6S5–12552–00	HOSE 8	1	1	1			
38	90446–24M89	HOSE (L420)	1	1	1			
39	90467–170A0	CLIP	1	1	1			
40	6S5–12577–00	HOSE 2	1	1	1			
41	90446–27M55	TUBE (L400)	1	1	1			
42	90467–160A0	CLIP	2	2	2			
43	6S5–12579–00	HOSE 4	1	1	1			
44	90447–19011	TUBE(L150)	1	1	1			
45	90467–160A0	CLIP	2	2	2			
46	6S5–1244G–00	HOSE, 4	1	1	1			
47	90467–160A0	CLIP	2	2	2			
48	90467–200A0	CLIP	2	2	2			
49	6S5–12594–00	JOINT, HOSE 4	1	1	1			
50	6S5–12576–00	HOSE 1	1	1	1			
51	90467–200A0	CLIP	2	2	2			
52	61L–5169A–00	NIPPLE, GREASE	1	1	1			
53	663–45119–00	CAP, GREASE NIPPLE	1	1	1			
54	90445–09M21	HOSE (L445)	1	1	1			

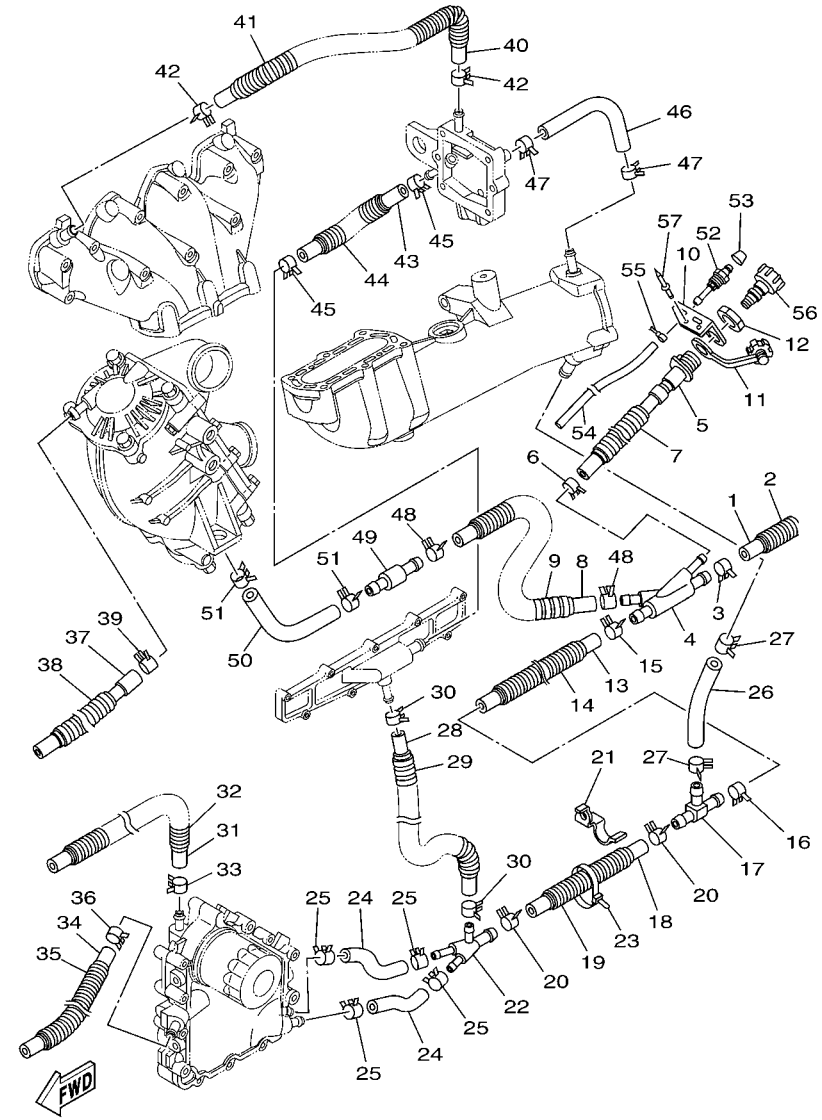

F1W1100-G140

FIG. 14 EXHAUST 2

REF. NO.	PART NO.	DESCRIPTION	CAN	EUR	GENE			REMARKS
55	90465–11829	CLAMP	1	1	1			
56	67X–E2590–10	CONDUCTION ASSY	1	1	1			
57	90267–489U1	RIVET,BLIND	2	2	2			

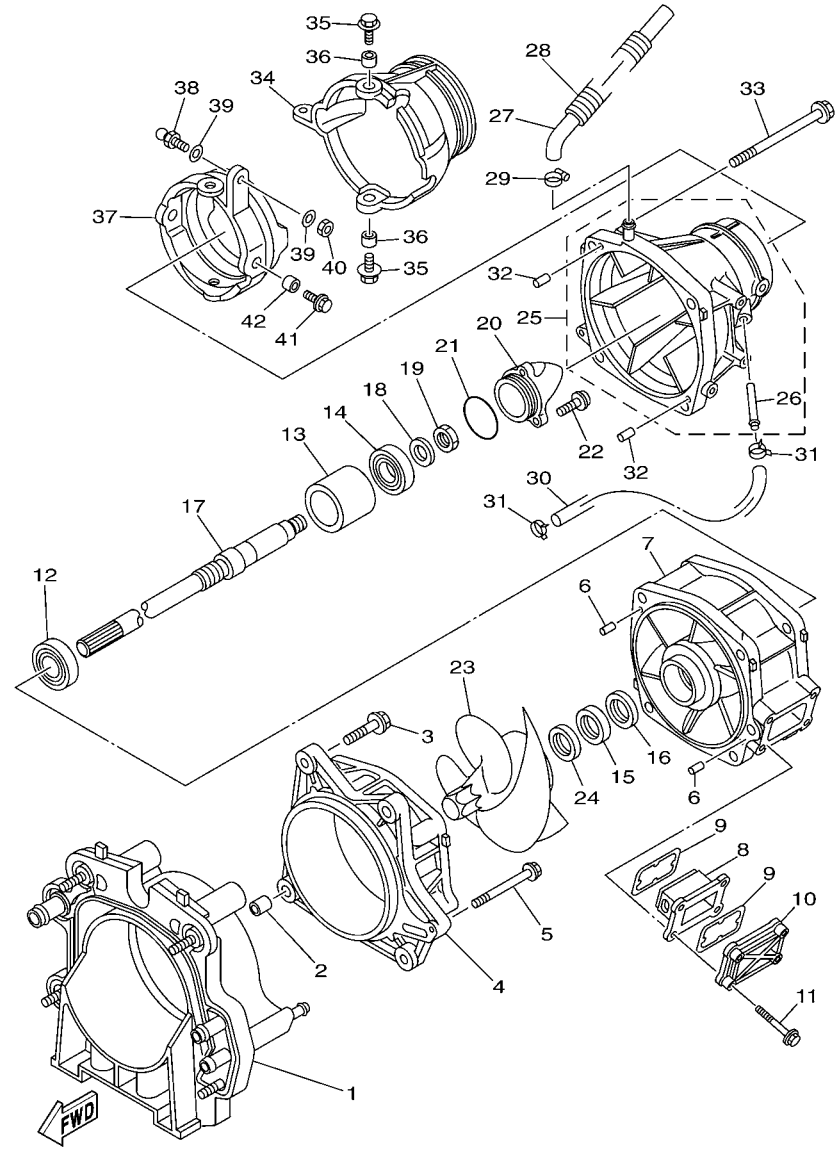

F2C1100-H150

FIG. 15 JET UNIT 1

REF. NO.	PART NO.	DESCRIPTION	CAN	EUR	GENE			REMARKS
1	6AN–G5831–00	PLATE, TRANSOM	1	1	1			
2	99590–14016	PIN, DOWEL	2	2	2			
3	90119–10836	BOLT, WITH WASHER	4	4	4			
4	66V–51312–01–94	HOUSING, IMPELLER	1	1	1			
5	90119–06835	BOLT, WITH WASHER	1	1	1			
6	93606–12019	PIN, DOWEL	2	2	2			
7	6S5–51315–00–94	DUCT, IMPELLER	1	1	1			
8	66V–46882–00	FILTER	1	1	1			
9	66V–42414–00	O-RING	2	2	2			
10	66V–45214–00–94	COVER, WATER INLET 1	1	1	1			
11	90119–06800	BOLT, WITH WASHER	4	4	4			
12	93306–20654	BEARING	1	1	1			
13	6S5–45538–00	SPACER 1	1	1	1			
14	93306–30582	BEARING	1	1	1			
15	93102–31009	OIL SEAL	1	1	1			
16	93102–31004	OIL SEAL	1	1	1			
17	6AN–45511–00	SHAFT, DRIVE	1	1	1			
18	9290P–20600	WASHER	1	1	1			
19	90170–20802	NUT	1	1	1			
20	6S5–51326–00–94	CAP	1	1	1			
21	6S5–5111K–00	O-RING 1	1	1	1			
22	90110–06822	BOLT, HEXAGON SOCKET HEAD	3	3	3			
23	6S5–R1321–03	IMPELLER	1	1	1			
24	6S5–R1348–00	SPACER	1	1	1			
25	6S5–51318–00–94	NOZZLE	1	1	1			
26	63M–51334–00	.NIPPLE,HOSE	1	1	1			
27	6AN–U72M2–00	HOSE 1	1	1	1			

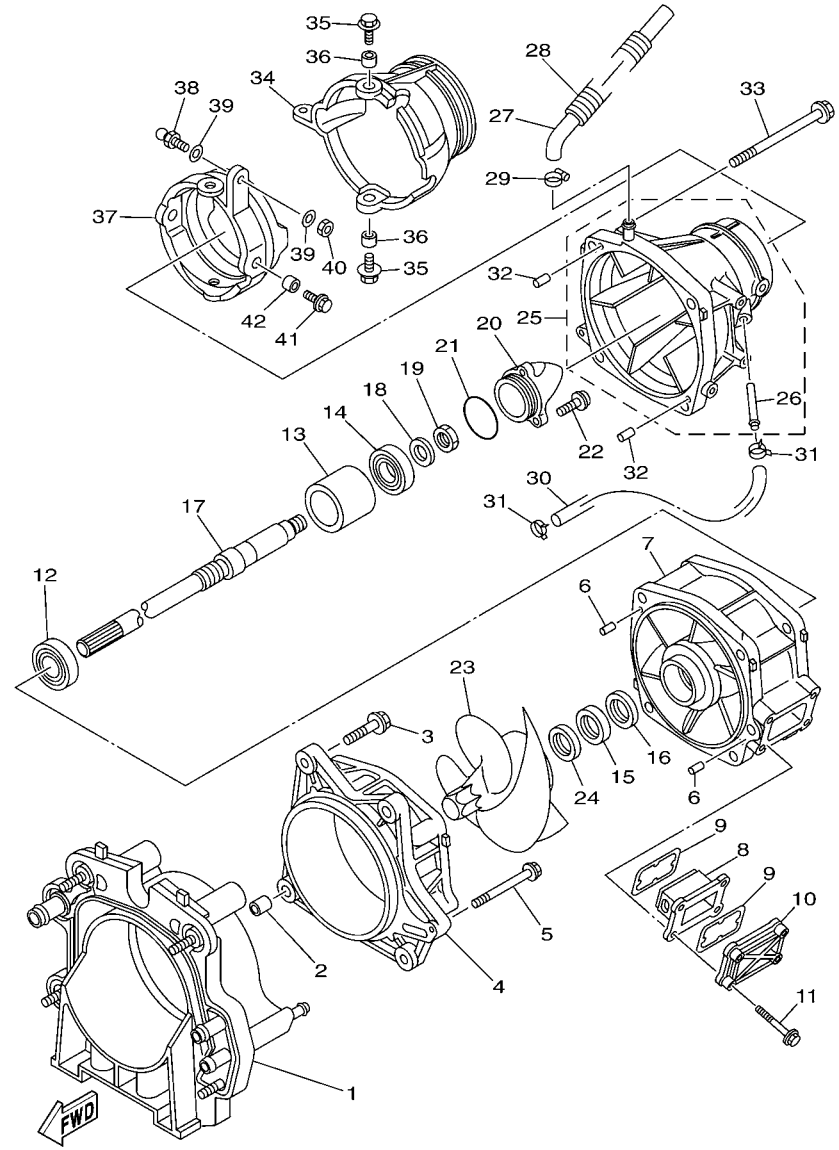

F2C1100-H150

FIG. 15 JET UNIT 1

REF. NO.	PART NO.	DESCRIPTION	CAN	EUR	GENE			REMARKS
28	90447–19015	TUBE (L230)	1	1	1			
29	90601–118UF	BAND, HOSE 18	1	1	1			
30	90445–14804	HOSE (L330)	1	1	1			
31	90467–14803	CLIP	2	2	2			
32	93606–12019	PIN, DOWEL	2	2	2			
33	90119–10806	BOLT, WITH WASHER	4	4	4			
34	6S5–R1313–00	NOZZLE, DEFLECTOR	1	1	1			
35	90119–089UE	BOLT, WITH WASHER	2	2	2			
36	90387–08M06	COLLAR	2	2	2			
37	60T–51190–00–94	RING,TRIM	1	1	1			
38	GH3–U146E–00	STUD, JOINT BALL	1	1	1			
39	90201–068M4	WASHER, PLATE	2	2	2			
40	9538R–06700	NUT	1	1	1			
41	90119–089UE	BOLT, WITH WASHER	2	2	2			
42	90387–08M06	COLLAR	2	2	2			

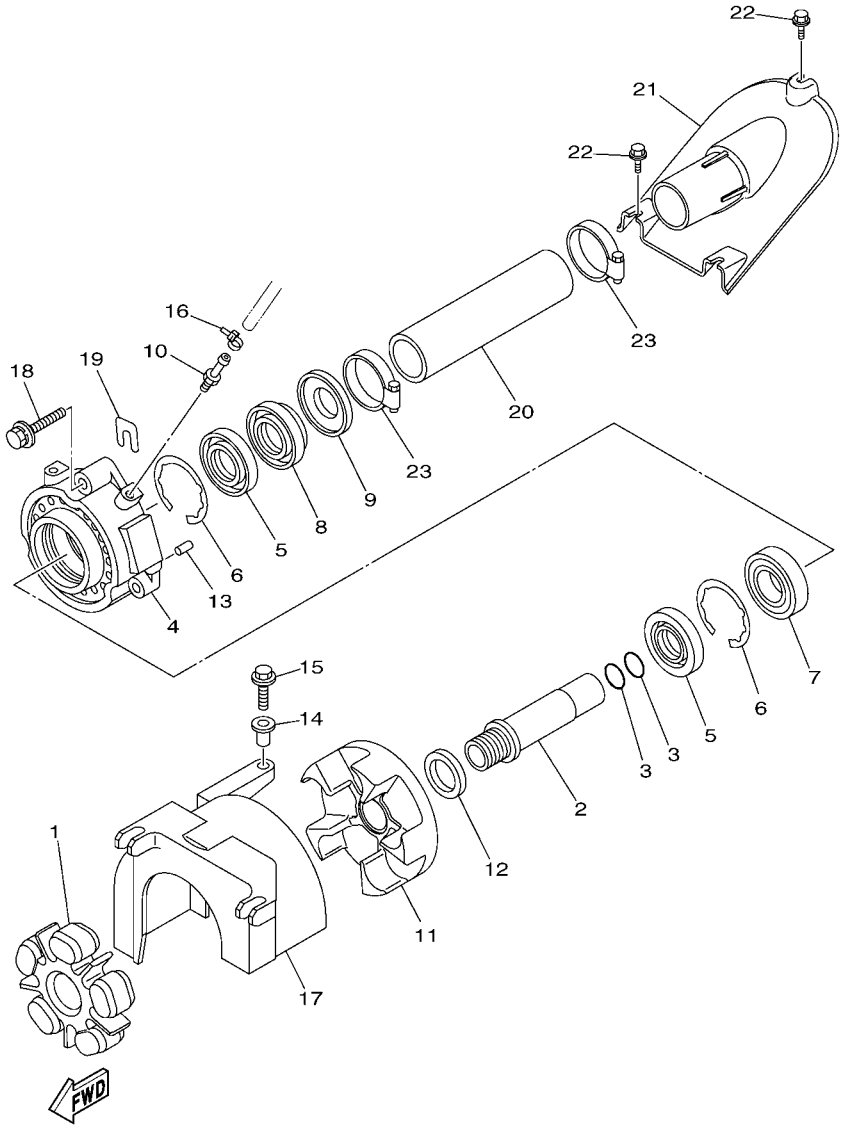

FIG. 16 JET UNIT 2

REF. NO.	PART NO.	DESCRIPTION	CAN	EUR	GENE			REMARKS
1	6S5–4581J–01	RUBBER SHAFT COUPLING	1	1	1			
2	6S5–51323–00	SHAFT, COUPLER	1	1	1			
3	93210–22MF1	O-RING	2	2	2			
4	6S5–45332–00–94	HOUSING, BEARING	1	1	1			
5	93102–29008	OIL SEAL	2	2	2			
6	93450–66156	CIRCLIP	2	2	2			
7	93306–20655	BEARING	1	1	1			
8	93102–29009	OIL SEAL	1	1	1			
9	6S5–45613–10	WASHER, THRUST	1	1	1			
10	61L–45378–00	NIPPLE, HOSE	1	1	1			
11	6S5–45593–00–94	FLANGE, COUPLING 1	1	1	1			
12	6S5–12289–00	WASHER	1	1	1			
13	93606–12019	PIN, DOWEL	2	2	2			
14	90387–06M60	COLLAR	1	1	1			
15	90119–069UD	BOLT, WITH WASHER	1	1	1			
16	90465–11829	CLAMP	1	1	1			
17	6S5–R1381–00	COVER	1	1	1			
18	90119–089UU	BOLT, WITH WASHER	3	3	3			
19	GD0–U7249–00–05	SHIM (T=0.5)	2	2	2			UR
20	F2C–U883B–00	PIPE, 1	1	1	1			
21	F2C–U883E–00	JOINT, PIPE	1	1	1			
22	90109–06832	BOLT	3	3	3			
23	90601–152U3	BAND, HOSE 52	2	2	2			

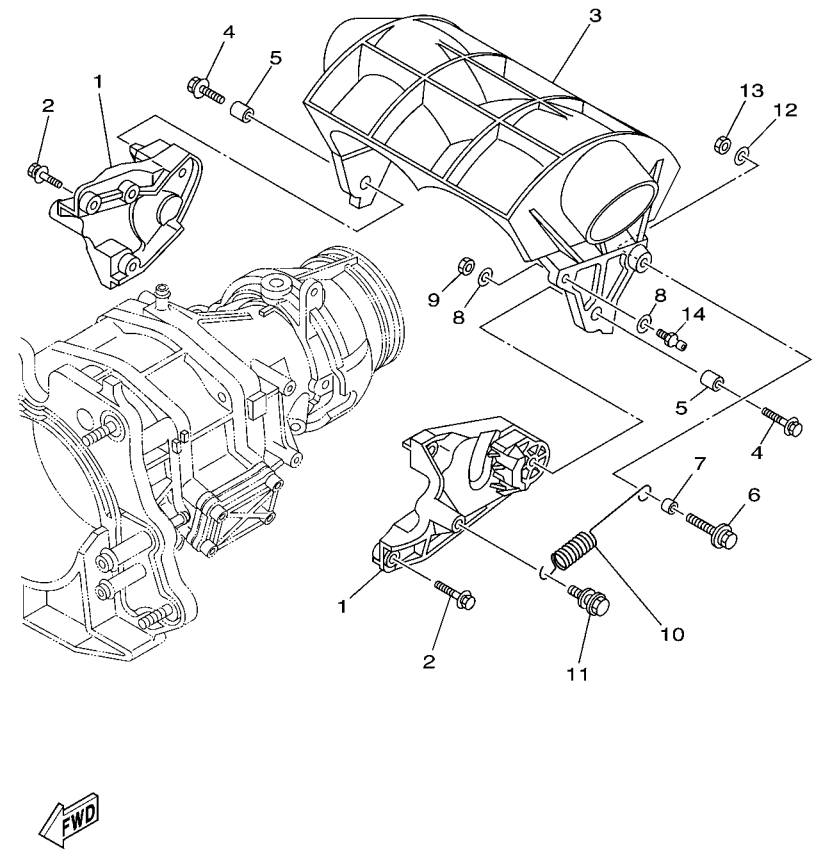

F1W1100-G170

FIG. 17 JET UNIT 3

REF. NO.	PART NO.	DESCRIPTION	CAN	EUR	GENE			REMARKS
1	6S5–51341–00–94	BRACKET 1	2	2	2			
2	90119–069UD	BOLT, WITH WASHER	6	6	6			
3	6S5–R1314–00	GATE, REVERSE	1	1	1			
4	90119–089UF	BOLT, WITH WASHER	2	2	2			
5	90387–08M30	COLLAR	2	2	2			
6	90119–069UX	BOLT, WITH WASHER	1	1	1			
7	90387–06M30	COLLAR	1	1	1			
8	90201–06801	WASHER, PLATE	2	2	2			
9	9538R–06600	NUT	1	1	1			
10	6S5–52358–00	SPRING, RETAINER	1	1	1			
11	6S5–45241–00	BOLT, FLANGE W/WASHER	1	1	1			
12	90201–06801	WASHER, PLATE	1	1	1			
13	9538R–06600	NUT	1	1	1			
14	EU0–U1461–02	STUD, JOINT BALL	1	1	1			

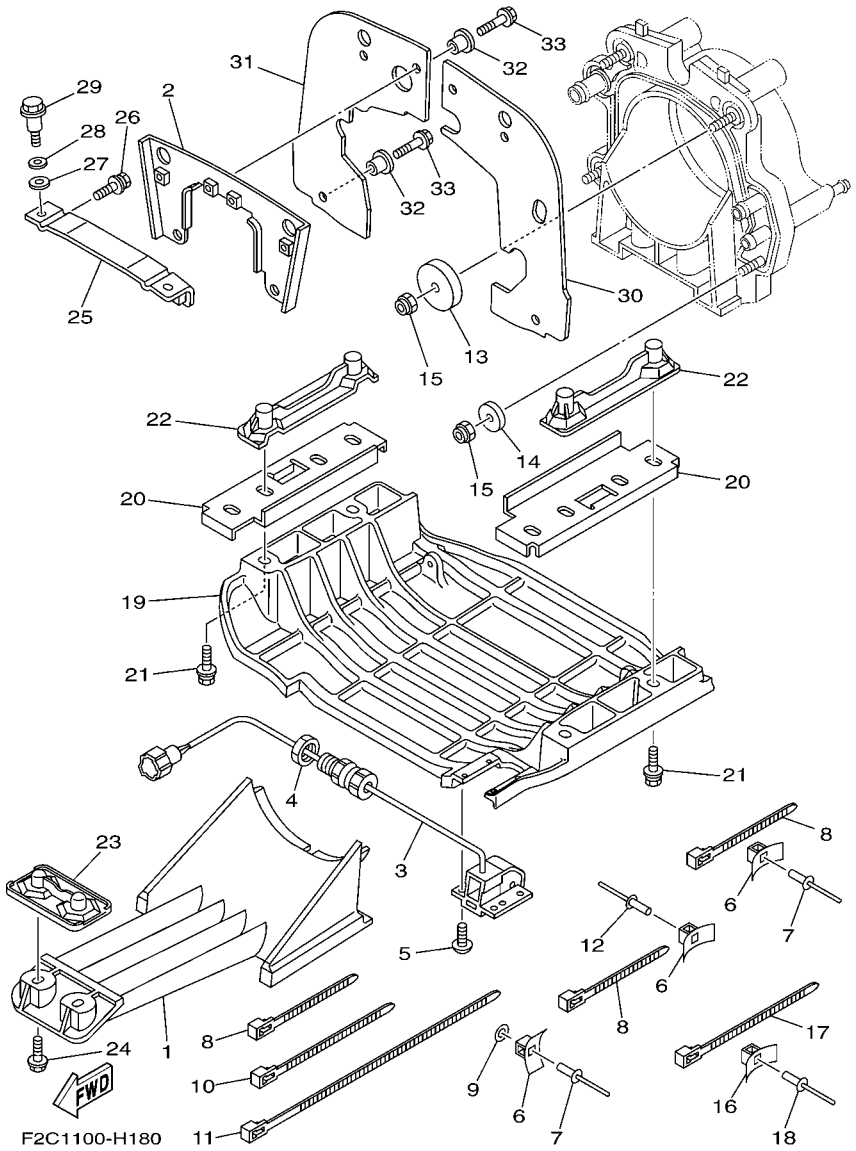

FIG. 18 JET UNIT 4

REF. NO.	PART NO.	DESCRIPTION	CAN	EUR	GENE			REMARKS
1	6AN–R1333–01	SCREEN, INTAKE	1	1	1			
2	6AN–R1341–00	BRACKET 1	1	1	1			
3	F1S–U8K31–02	SENSOR SPEED	1	1	1			
4	EU0–62241–30	NUT, DRAIN 1	1	1	1			
5	90150–05807	SCREW, ROUND HEAD	4	4	4			
6	90600–91736	CLAMP COMP.	10	10	10			
7	90267–48802	RIVET, BLIND	6	6	6			
8	90464–32801	CLAMP	9	9	9			
9	9299R–05200	WASHER	2	2	2			
10	90464–32801	CLAMP	1	1	1			
11	90464–99801	CLAMP	1	1	1			
12	90267–489U6	RIVET, BLIND	4	4	4			
13	F1S–U725E–00	WASHER	2	2	2			
14	90201–10801	WASHER, PLATE	2	2	2			
15	9572R–10300	NUT, FLANGE	4	4	4			
16	90600–91736	CLAMP COMP.	2	2	2			
17	90464–32801	CLAMP	2	2	2			
18	90267–48802	RIVET, BLIND	2	2	2			
19	F2C–U273B–02	PLATE 2	1	1	1			
20	F2C–U143G–00	SPACER	2	2	2			
21	90119–08823	BOLT, WITH WASHER	4	4	4			
22	F1G–U8572–01	BRACKET 2	2	2	2			
23	F2C–U8577–02	BRACKET, 3	1	1	1			
24	90119–10808	BOLT, WITH WASHER	4	4	4			
25	F2C–U7557–01	BRACKET	1	1	1			
26	90119–089U7	BOLT, WITH WASHER	2	2	2			
27	90430–12002	GASKET	2	2	2			

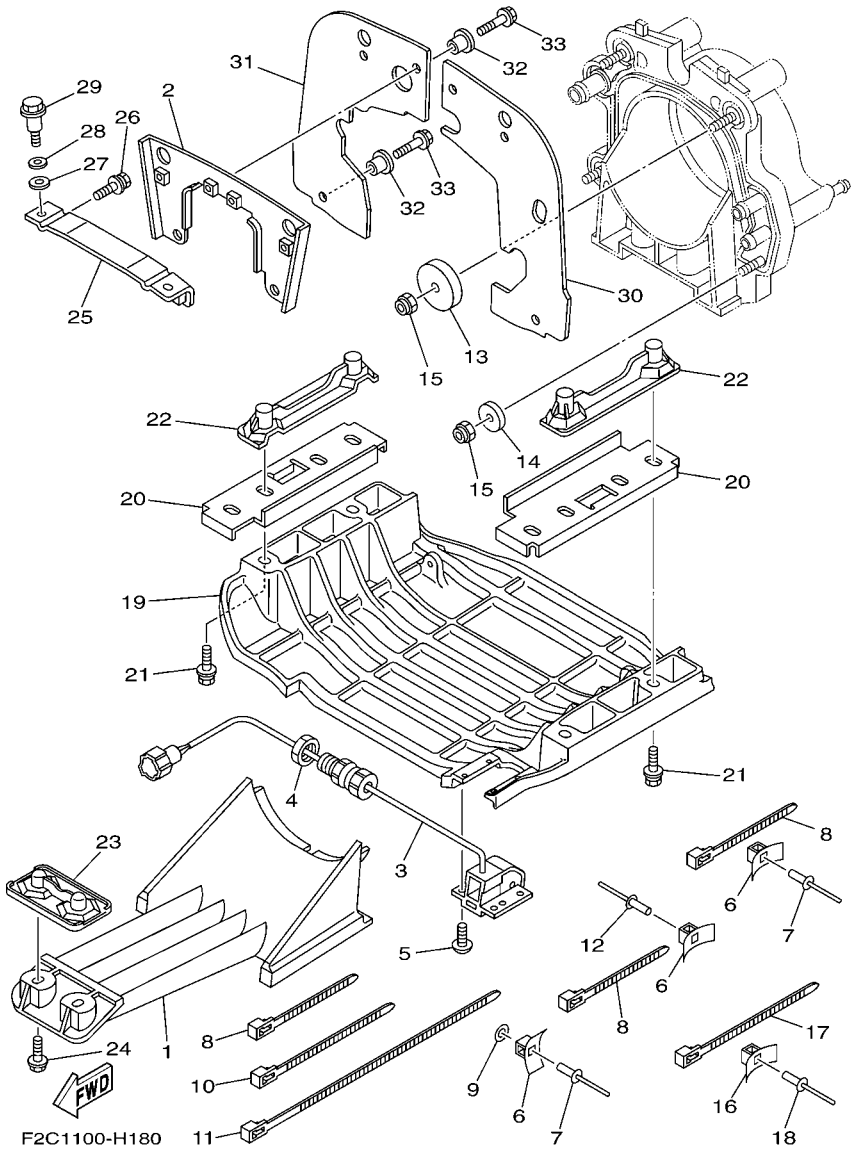

FIG. 18 JET UNIT 4

REF. NO.	PART NO.	DESCRIPTION	CAN	EUR	GENE			REMARKS
28	92990–12200	WASHER, PLAIN	2	2	2			
29	90109–08041	BOLT	2	2	2			
30	F2C–U757E–01	PLATE, RUBBER 1	1	1	1			
31	F2C–U757F–01	PLATE, RUBBER 2	1	1	1			
32	90387–06080	COLLAR	6	6	6			
33	90119–06827	BOLT, WITH WASHER	6	6	6			

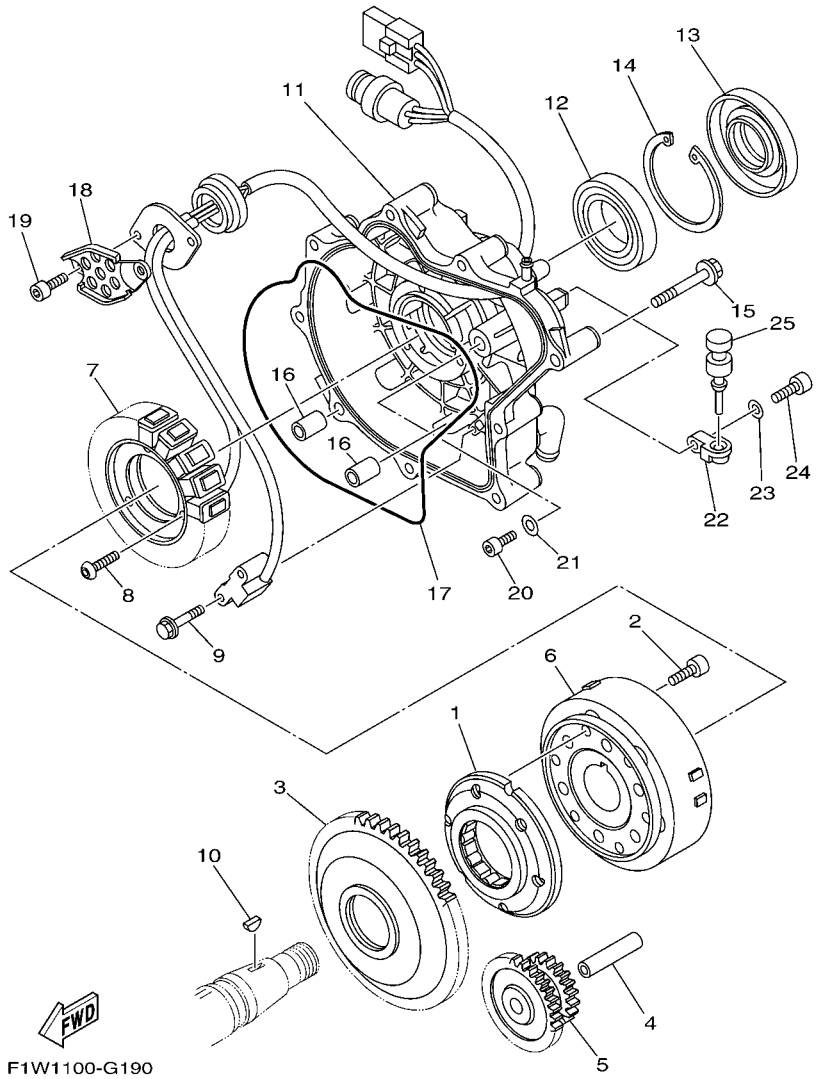

FIG. 19 GENERATOR

REF. NO.	PART NO.	DESCRIPTION	CAN	EUR	GENE			REMARKS
1	6S5–15590–00	STARTER ONE-WAY ASSY	1	1	1			
2	90110–08212	BOLT, HEXAGON SOCKET HEAD	6	6	6			
3	6S5–15515–00	GEAR 3	1	1	1			
4	6S5–15521–00	SHAFT 1	1	1	1			
5	6S5–15517–00	GEAR, IDLER 2	1	1	1			
6	6S5–81450–01	ROTOR ASSY	1	1	1			
7	6S5–81410–00	STATOR ASSY	1	1	1			
8	90149–06229	SCREW	3	3	3			
9	97513–05514	BOLT, WITH WASHER	2	2	2			
10	90280–03047	KEY, WOODRUFF	1	1	1			
11	6S5–81337–00–94	COVER, FLYWHEEL	1	1	1			
12	93306–00805	BEARING	1	1	1			
13	6S5–81167–10	OIL SEAL	1	1	1			
14	99009–72500	CIRCLIP	1	1	1			
15	95024–08050	BOLT, FLANGE	9	9	9			
16	99530–10114	PIN, DOWEL	2	2	2			
17	6S5–81168–00	O-RING	1	1	1			
18	6S5–81328–00	CLAMP	1	1	1			
19	91317–06014	BOLT	2	2	2			
20	91317–05010	BOLT	1	1	1			
21	90201–052E8	WASHER, PLATE	1	1	1			
22	60E–51341–00–94	BRACKET 1	2	2	2			
23	92995–06600	WASHER	2	2	2			
24	91380–06020	BOLT	2	2	2			
25	90480–06M46	GROMMET	2	2	2			

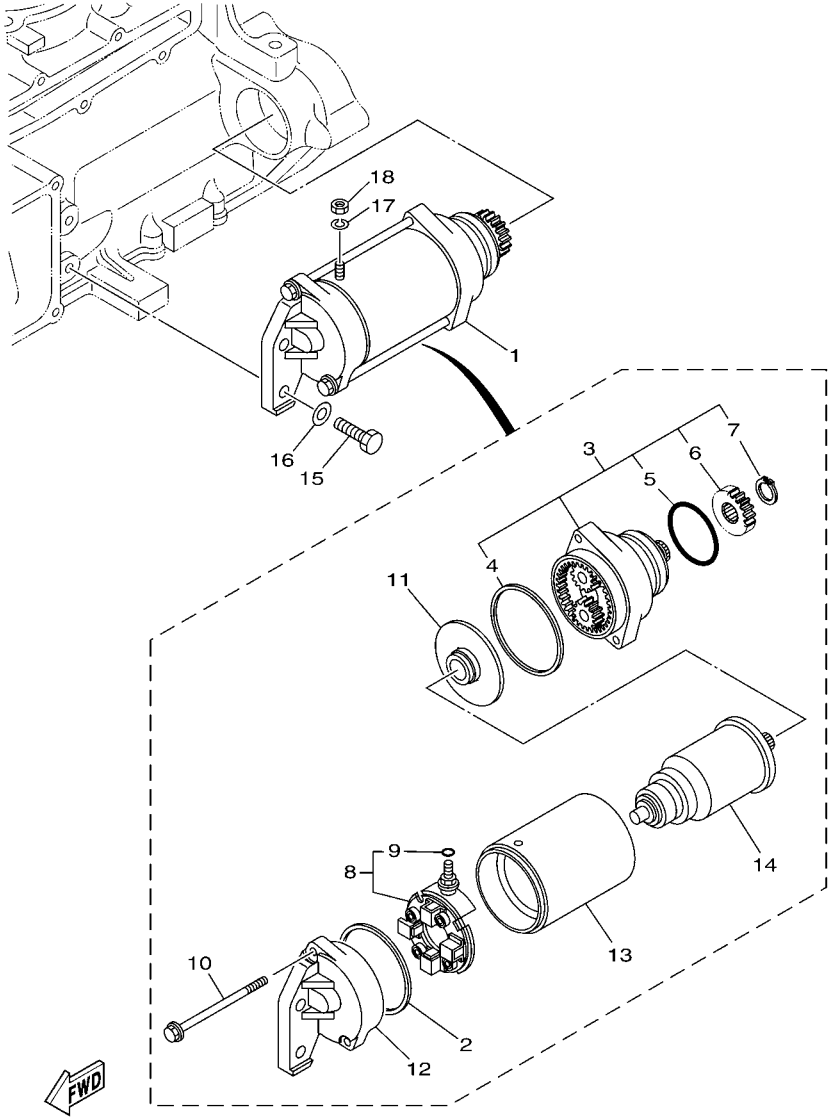

F1W1100-G200

FIG. 20 STARTING MOTOR

REF. NO.	PART NO.	DESCRIPTION	CAN	EUR	GENE			REMARKS
1	6S5–81800–00	STARTING MOTOR ASSY	1	1	1			
2	11H–81844–00	.GASKET	1	1	1			
3	6S5–81830–00	.FRONT BRACKET ASSY	1	1	1			
4	4G0–81844–00	..GASKET	1	1	1			
5	1J7–81847–60	..O-RING	1	1	1			
6	5EL–15511–00	..GEAR, STARTING MOTOR	1	1	1			
7	93410–12003	..CIRCLIP	1	1	1			
8	6S5–81840–00	.BRUSH HOLDER ASSY	1	1	1			
9	3TB–81847–00	..O-RING	1	1	1			
10	6S5–81826–00	.BOLT	2	2	2			
11	5EL–81845–00	.PLATE	1	1	1			
12	6S5–81820–00	.REAR BRACKET ASSY	1	1	1			
13	6S5–81810–00	.STATOR ASSY	1	1	1			
14	5A8–81850–10	.ARMATURE ASSY	1	1	1			
15	97013–08030	BOLT	2	2	2			
16	92903–08600	WASHER, PLATE	2	2	2			
17	92990–06100	WASHER, SPRING	1	1	1			
18	95380–06700	NUT	1	1	1			

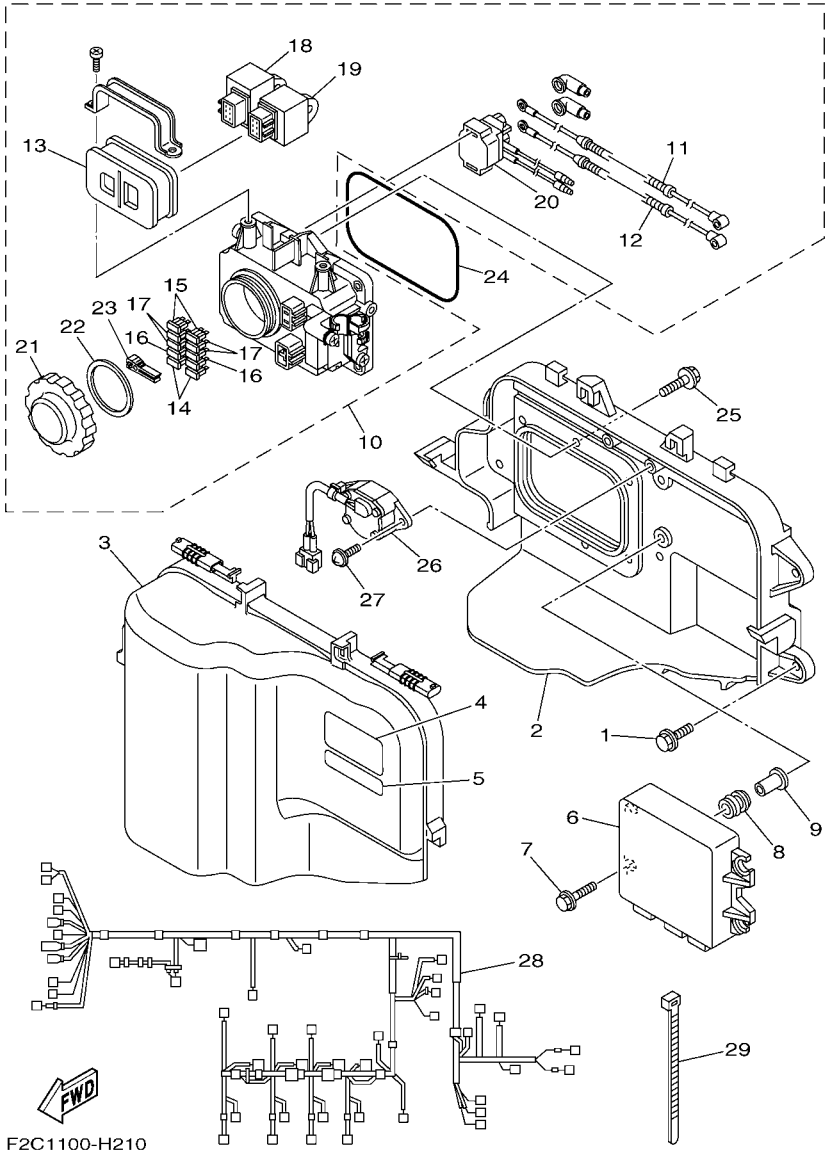

FIG. 21 ELECTRICAL 1

REF. NO.	PART NO.	DESCRIPTION	CAN	EUR	GENE			REMARKS
1	90119–089UT	BOLT, WITH WASHER	4	4	4			
2	6BH–81845–00	PLATE	1	1	1			
3	6S5–81942–00	COVER	1	1	1			
4	6B6–83623–00	MARK 3	1	1	1			
5	60E–83627–00	LABEL, CAUTION 7	1	1	1			
6	6AN–8591A–00	ENGINE CONTROL UNIT ASSY	1		1			
	6AN–8591A–10	ENGINE CONTROL UNIT ASSY		1				
7	90119–06M35	BOLT, WITH WASHER	4	4	4			
8	6A0–82317–00	DAMPER, IGNITION COIL	4	4	4			
9	90387–06119	COLLAR	4	4	4			
10	6BH–82170–00	FUSE BOX ASSY	1	1	1			
11	6S5–82115–00	.WIRE, PLUS LEAD	1	1	1			
12	6S5–82117–00	.WIRE, LEAD	1	1	1			
13	6D3–82157–00	.DAMPER	1	1	1			
14	67F–82151–00	.FUSE (20A)	2	2	2			
15	67F–82151–10	.FUSE (30A)	2	2	2			
16	67F–82151–30	.FUSE (3A)	2	2	2			
17	67F–82151–40	.FUSE (10A)	4	4	4			
18	60E–81950–00	.RELAY ASSY	1	1	1			
19	68V–81950–00	.RELAY ASSY	1	1	1			
20	6B6–81940–00	.STARTER RELAY ASSY	1	1	1			
21	66V–8132W–00	.CAP	1	1	1			
22	66V–81844–00	.GASKET	1	1	1			
23	67F–2812A–00	.PULLER, FUSE	1	1	1			
24	6BH–81847–00	O-RING	1	1	1			
25	90119–06091	BOLT, WITH WASHER	6	6	6			
26	6S5–8259E–00	SWITCH ASSY	1	1	1			

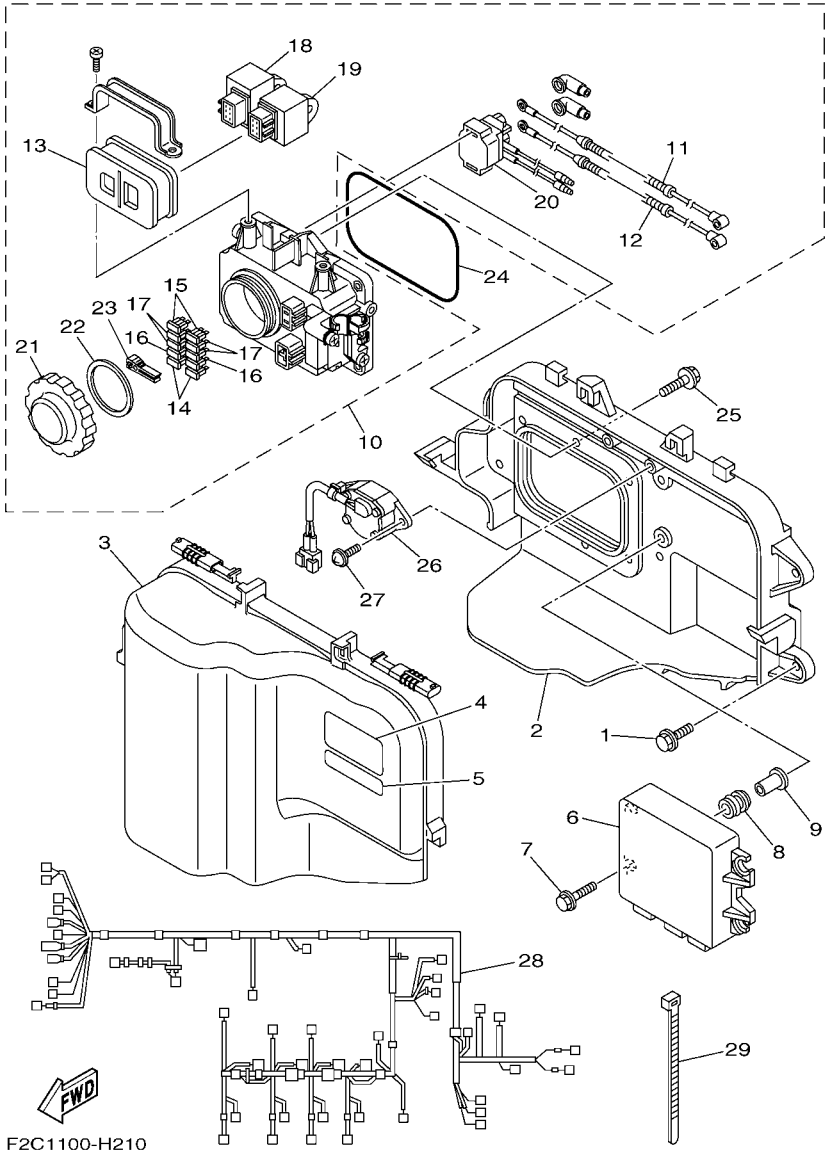

FIG. 21 ELECTRICAL 1

REF. NO.	PART NO.	DESCRIPTION	CAN	EUR	GENE			REMARKS
27	97780–60520	SCREW, TAPPING	2	2	2			
28	6AN–8259L–00	WIRE HARNESS ASSY 1	1	1	1			
29	90465–14M66	CLAMP	1	1	1			

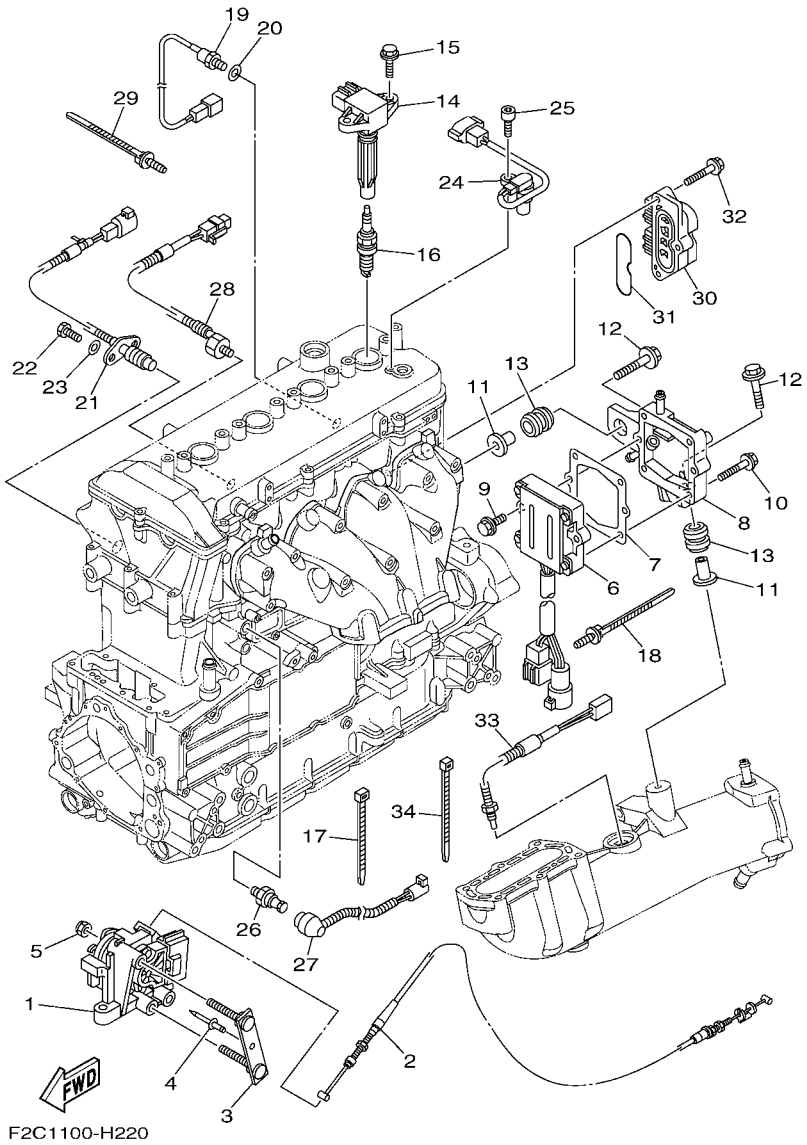

FIG. 22 ELECTRICAL 2

REF. NO.	PART NO.	DESCRIPTION	CAN	EUR	GENE			REMARKS
1	6D3–14305–21	ACCEL. POSITON SENSOR ASSY	1	1	1			
2	6AN–26311–00	CABLE, THROTTLE 1	1	1	1			
3	F1W–U7254–00	BRACKET, THROTTLE	1	1	1			
4	90267–489U1	RIVET,BLIND	1	1	1			
5	95780–08300	NUT, FLANGE	2	2	2			
6	6S5–81960–00	RECTIFIER & REGULATOR ASSY	1	1	1			
7	6S5–81975–00	PLATE, RECTIFIER FITTING	1	1	1			
8	6S5–81972–01–94	COVER, RECTIFIER	1	1	1			
9	90119–06MA3	BOLT, WITH WASHER	2	2	2			
10	90119–06MA5	BOLT, WITH WASHER	4	4	4			
11	6D3–14495–00	COLLAR	2	2	2			
12	90119–08M22	BOLT, WITH WASHER	2	2	2			
13	90480–22M15	GROMMET	2	2	2			
14	6S5–82310–00	IGNITION COIL ASSY	4	4	4			
15	90105–06903	BOLT, FLANGE	8	8	8			
16	94702–00427	PLUG, SPARK (NGK LFR6A)	4	4	4			
17	90465–13M18	CLAMP	5	5	5			
18	90464–31001	CLAMP	2	2	2			
19	61A–85790–00	THERMOSENSOR ASSY	1	1	1			
20	92990–10600	WASHER, PLATE	1	1	1			
21	60E–82560–01	THERMO SWITCH ASSY	1	1	1			
22	97095–06016	BOLT	2	2	2			
23	92995–06600	WASHER	2	2	2			
24	6D3–85896–00	SENSOR, CAM POSITION	1	1	1			
25	91380–06016	BOLT	1	1	1			
26	68V–82504–00	OIL PRESSURE SWITCH ASSY	1	1	1			
27	6S5–81315–00	LEAD WIRE ASSY	1	1	1			

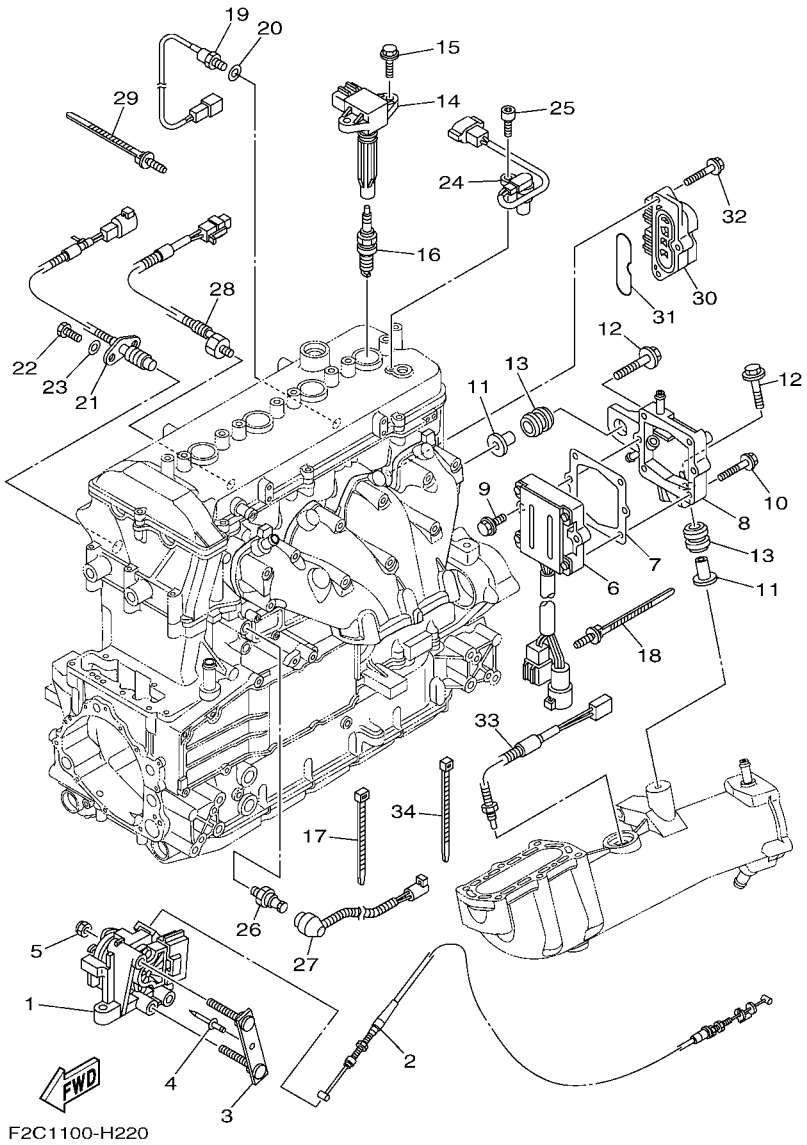

FIG. 22 ELECTRICAL 2

REF. NO.	PART NO.	DESCRIPTION	CAN	EUR	GENE			REMARKS
28	6P2–85780–00	SENSOR, KNOCK	1	1	1			
29	90464–31001	CLAMP	1	1	1			
30	6D3–8273J–01	EARTH PLATE COMP.	1	1	1			
31	93210–60ME8	O-RING	1	1	1			
32	90119–06048	BOLT, WITH WASHER	3	3	3			
33	6AA–85790–00	THERMOSENSOR ASSY	1	1	1			
34	90464–31001	CLAMP	1	1	1			

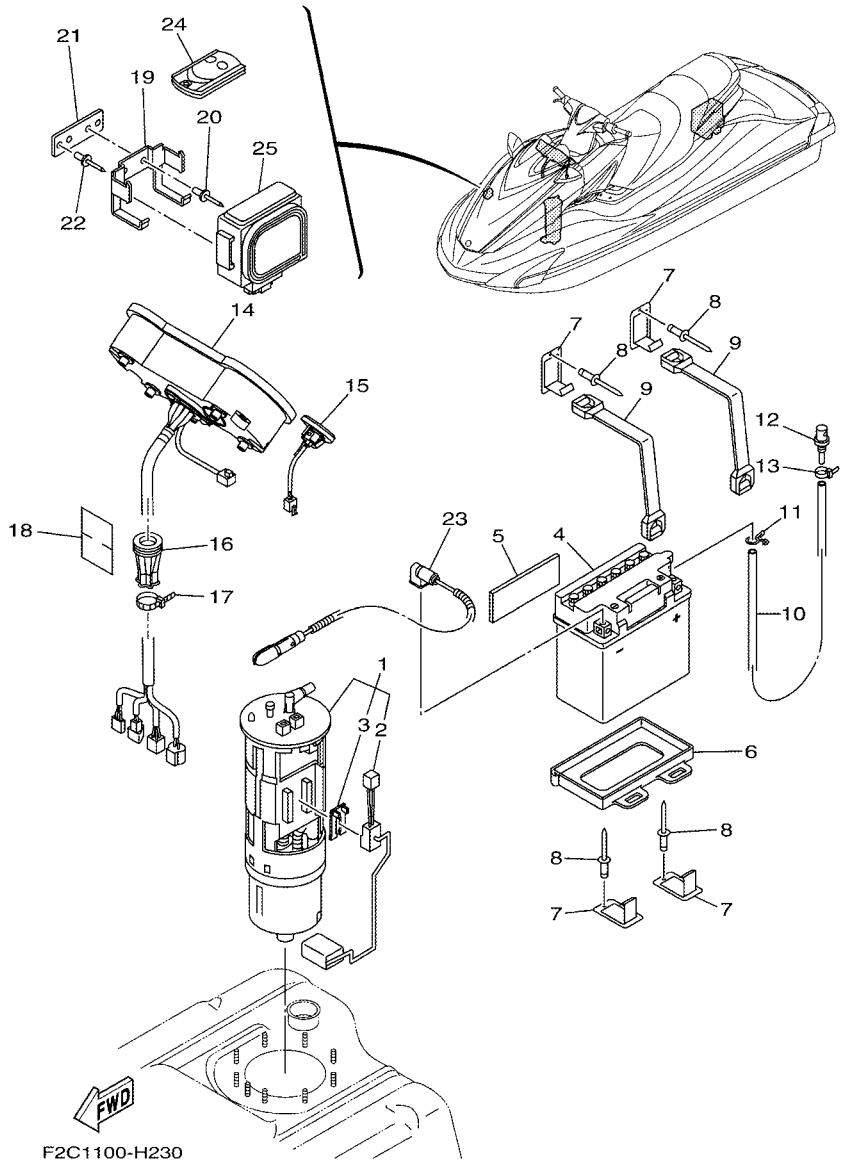

FIG. 23 ELECTRICAL 3

REF. NO.	PART NO.	DESCRIPTION	CAN	EUR	GENE			REMARKS
1	6S5–13907–00	FUEL PUMP COMP.	1	1	1			
2	6S5–682E0–00	.FUEL SENDER ASSY	1	1	1			
3	60E–82556–00	.DAMPER, STOPPER	1	1	1			
4	EU0–82110–09	BATTERY ASSY (YB16CL-B)	1	1	1			YUASA
5	F1K–U8221–00	PAD, BATTERY	1	1	1			
6	F1K–U8211–01	CASE, BATTERY	1	1	1			
7	F1K–U5772–02	HOOK A	4	4	4			
8	90267–489U1	RIVET,BLIND	4	4	4			
9	F1K–U821D–01	BAND, BATTERY 1	2	2	2			
10	F0D–U785G–10	HOSE, AIR VENT	1	1	1			
11	90467–089U1	CLIP	1	1	1			
12	GJ3–6215F–00	NIPPLE	1	1	1			
13	90465–11829	CLAMP	1	1	1			
14	F2C–6820A–00	METER ASSY	1	1	1			
15	F2C–68090–00	SWITCH ASSY.	1	1	1			
16	F1X–U822E–00	GROMMET	1	1	1			
17	90601–200U1	BAND	1	1	1			
18	GJ1–U7578–11	PACKING, HOSE 2	1	1	1			
19	F1W–U826C–00	BRACKET	1	1	1			
20	90267–489U1	RIVET,BLIND	2	2	2			
21	F1W–U8376–00	PLATE	1	1	1			
22	90267–489U1	RIVET,BLIND	2	2	2			
23	6S5–82116–00	WIRE, MINUS LEAD	1	1	1			
24	6B6–86261–00	TRANSMITTER COMP	2					
	6B6–86261–10	TRANSMITTER COMP		2	2			
25	6B6–86265–00	RECIVER COMP	1					
	6B6–86265–10	RECIVER COMP		1	1			

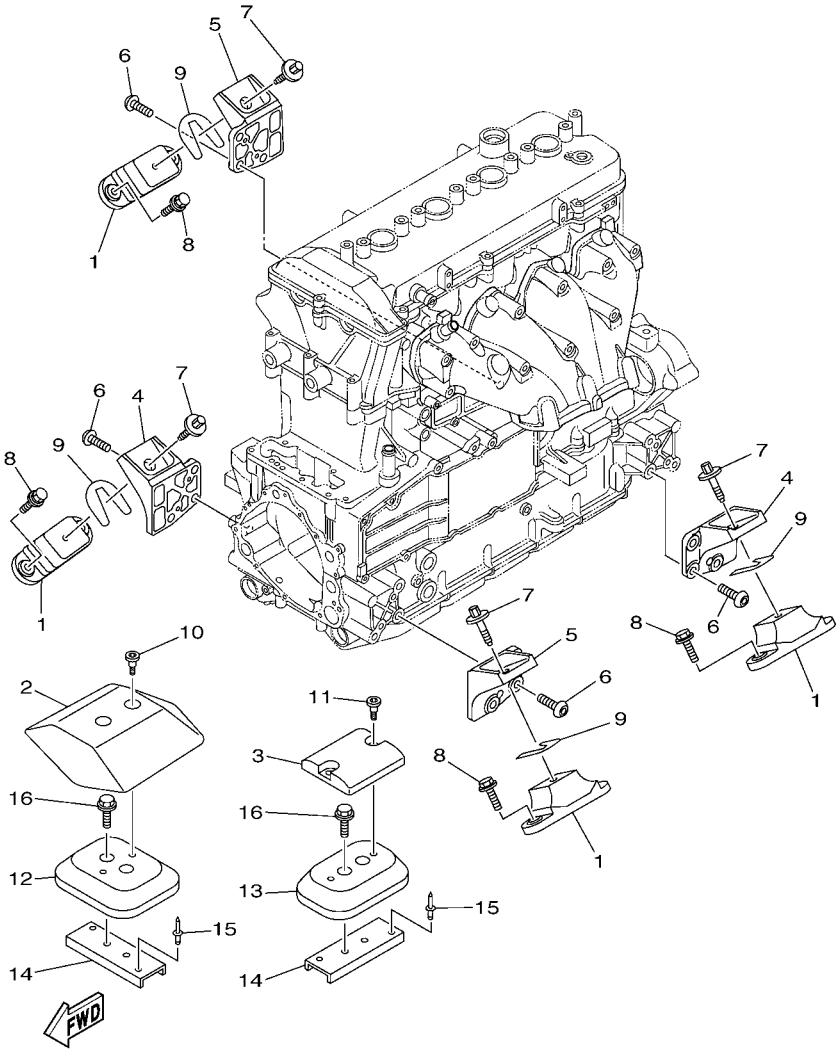

FIG. 24 ENGINE MOUNT

REF. NO.	PART NO.	DESCRIPTION	CAN	EUR	GENE			REMARKS
1	67X–44517–10–94	MOUNT RUBBER	4	4	4			
2	6BH–G4532–00	STOPPER, UPPER MOUNT	1	1	1			
3	6BH–G4574–00	STOPPER, LOWER MOUNT RUBBER	1	1	1			
4	6S5–41661–00–94	BRACKET 1	2	2	2			
5	6S5–41662–00–94	BRACKET 2	2	2	2			
6	90149–10052	SCREW	12	12	12			
7	90119–08842	BOLT, WITH WASHER	4	4	4			
8	90119–08823	BOLT, WITH WASHER	8	8	8			
9	EU0–U7354–00–01	SHIM (T=0.1)	10	10	10			UR
	EU0–U7354–00–03	SHIM (T=0.3)	10	10	10			UR
	EU0–U7354–00–05	SHIM (T=0.5)	10	10	10			UR
	EU0–U7354–00–10	SHIM (T=1.0)	10	10	10			UR
	EU0–U7354–00–20	SHIM (T=2.0)	10	10	10			UR
10	90109–06874	BOLT	2	2	2			
11	90109–06875	BOLT	2	2	2			
12	F2C–U721B–00	SPACER,ENGINE MOUNT	1	1	1			
13	F2C–U721B–10	SPACER,ENGINE MOUNT	1	1	1			
14	F2C–U732B–00	PLATE	2	2	2			
15	90267–489U2	RIVET, BLIND	4	4	4			
16	90119–069UD	BOLT, WITH WASHER	4	4	4			

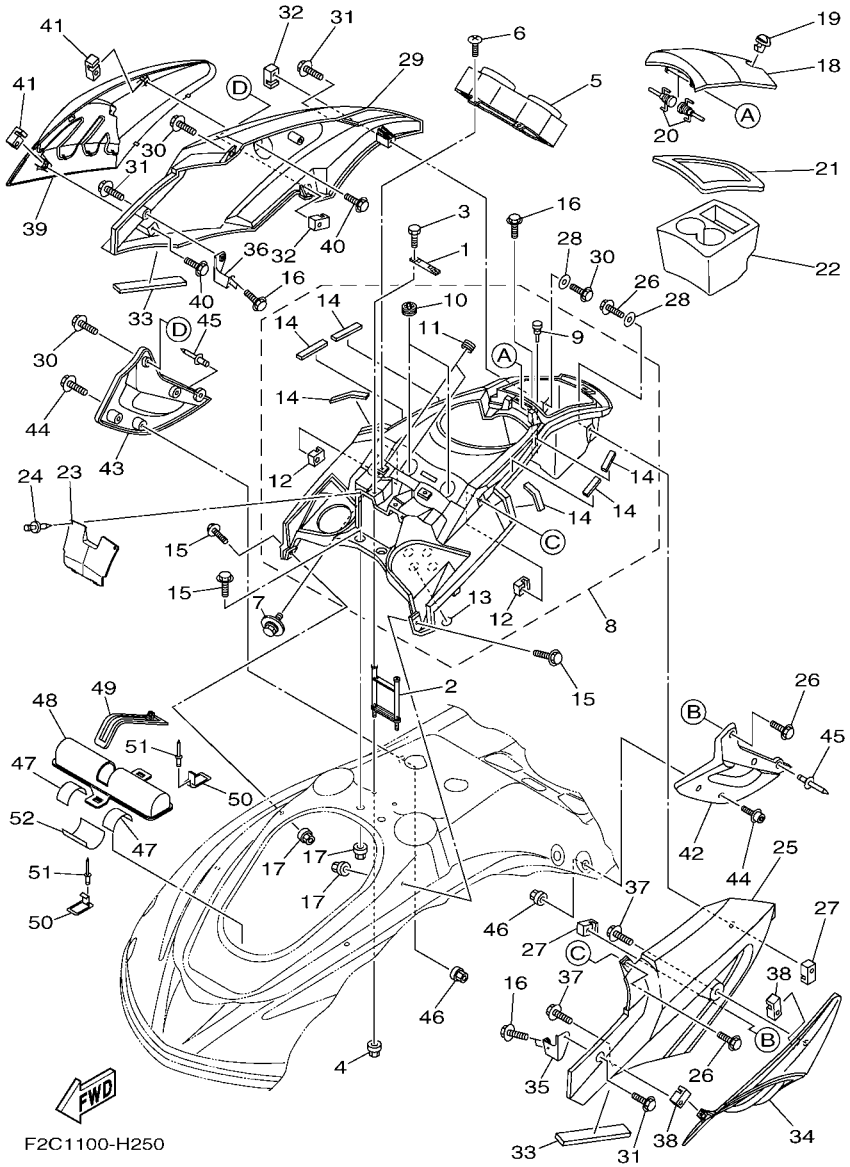

FIG. 25 ENGINE HATCH 1

REF. NO.	PART NO.	DESCRIPTION	CAN	EUR	GENE			REMARKS
1	F1W–U517F–00	HOOK,LID LOCK	1	1	1			
2	F1W–U555D–01	BRKT., COVER CENTER 1	1	1	1			
3	90101–05800	BOLT	2	2	2			
4	90185–06014	NUT, SELF-LOCKING	2	2	2			
5	F2C–U82AA–00	METER COVER ASSY.	1	1	1			
6	90149–05903	SCREW	2	2	2			
7	90119–05803	BOLT, WITH WASHER	4	4	4			
8	F2C–U5508–02	CENTER COVER ASSY.	1	1	1			
9	90605–502U2	.PLUG	1	1	1			
10	F1X–U828E–01	.DAMPER 1	2	2	2			
11	90480–19800	.GROMMET	4	4	4			
12	F1X–U517E–01	.NUT	2	2	2			
13	F2R–U884B–00	.SEAL 1	4	4	4			
14	F0X–U515E–01	.DAMPER 2	6	6	6			
15	90119–06880	BOLT, WITH WASHER	4	4	4			
16	90119–06882	BOLT, WITH WASHER	5	5	5			
17	90185–06014	NUT, SELF-LOCKING	4	4	4			
18	F2C–U517H–01	LID HATCH	1	1	1			
19	GU2–62875–01	LOCK	1	1	1			
20	F1B–6517R–00	PIN, HINGE	2	2	2			
21	F2C–U519D–01	PACKING CASE	1	1	1			
22	F2C–U5633–00	HOLDER, DRINK	1	1	1			
23	F1W–U555B–00	SEAL, COVER CENTER	1	1	1			
24	F1W–U2698–00	RIVET	2	2	2			
25	F2C–U377B–20–P0	COVER,SIDE 1	1	1	1			FOR DPBMT
26	90119–06880	BOLT, WITH WASHER	3	3	3			
27	F1X–U517E–01	NUT	2	2	2			

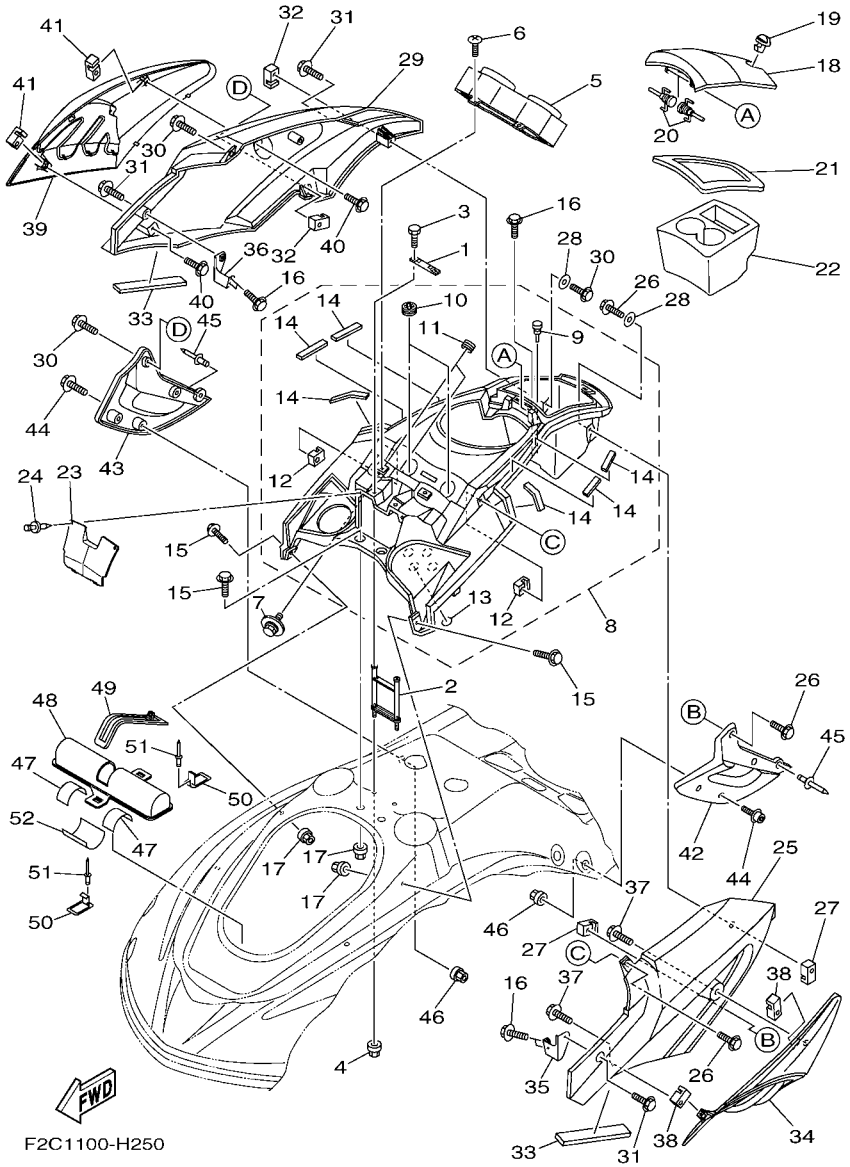

FIG. 25 ENGINE HATCH 1

REF. NO.	PART NO.	DESCRIPTION	CAN	EUR	GENE			REMARKS
28	90201–068G7	WASHER, PLATE	2	2	2			
29	F2C–U377C–20–P0	COVER,SIDE 2	1	1	1			FOR DPBMT
30	90119–06880	BOLT, WITH WASHER	3	3	3			
31	90119–06882	BOLT, WITH WASHER	3	3	3			
32	F1X–U517E–01	NUT	2	2	2			
33	F2C–U515D–00	DAMPER 1	2	2	2			
34	F2C–U517W–00	ORNAMENT, LH	1	1	1			
35	F2C–U377M–00	BRKT., COVER SIDE 1	1	1	1			
36	F2C–U377N–00	BRKT, COVER SIDE 2	1	1	1			
37	90119–06880	BOLT, WITH WASHER	2	2	2			
38	F1X–U517E–01	NUT	2	2	2			
39	F2C–U517X–00	ORNAMENT, RH	1	1	1			
40	90119–06880	BOLT, WITH WASHER	2	2	2			
41	F1X–U517E–01	NUT	2	2	2			
42	F2C–U353B–00	PAD, KNEE (LH)	1	1	1			
43	F2C–U353B–10	PAD, KNEE (RH)	1	1	1			
44	90110–06823	BOLT, HEXAGON SOCKET HEAD	6	6	6			
45	90267–48807	RIVET, BLIND	2	2	2			
46	90185–06014	NUT, SELF-LOCKING	6	6	6			
47	F1K–U759C–00	MAT 2	2	2	2			
48	F1K–U5983–01	BOX, FIRE EXTINGUISHER	1	1	1			
49	F1K–U828K–00	BAND, 1	1	1	1			
50	F1K–U5772–02	HOOK A	2	2	2			
51	90267–489U1	RIVET,BLIND	2	2	2			
52	F1S–U8221–00	PAD, BATTERY	1	1	1			

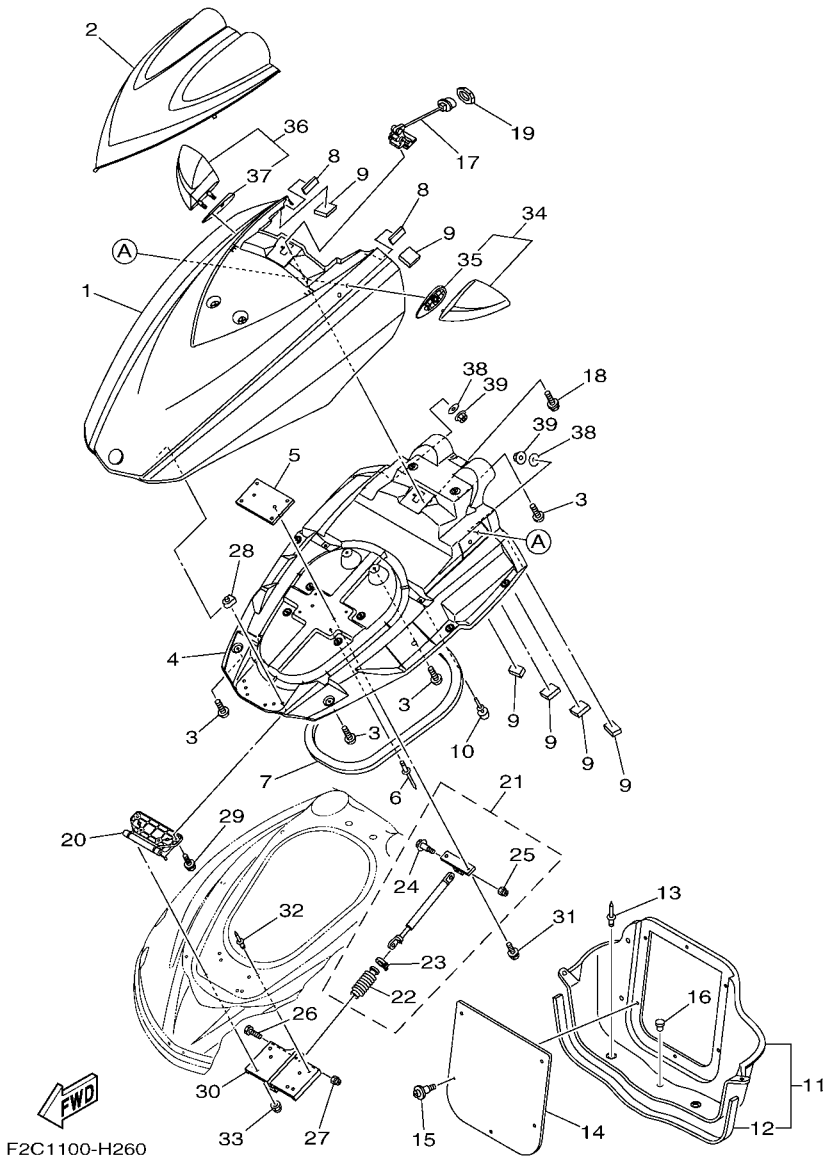

FIG. 26 ENGINE HATCH 2

REF. NO.	PART NO.	DESCRIPTION	CAN	EUR	GENE			REMARKS
1	F2C–U517B–20–P0	LID, ENGINE ROOM	1	1	1			FOR DPBMT
2	F2C–U515N–00–P0	VISOR	1	1	1			BMG FOR DPBMT
3	90149–05903	SCREW	14	14	14			
4	F2C–U213B–00	COVER,VENTILATOR 1	1	1	1			
5	F1W–U5148–00	PLATE, HATCH	1	1	1			
6	90267–48807	RIVET, BLIND	4	4	4			
7	F1K–U2663–00	PACKING 1	1	1	1			
8	F1K–U266B–00	PACKING 3	4	4	4			
9	F2C–U1743–00	PACKING	6	6	6			
10	F1W–U3768–01	CUSHION, RUBBER	2	2	2			
11	F2C–U475B–00	LOCKER,BOW	1	1	1			
12	F2C–U266C–00	.PACKING 4	1	1	1			
13	90267–489UP	RIVET, BLIND	4	4	4			
14	F1W–U475F–01	PLATE, LOKER BOW	1	1	1			
15	90269–08801	RIVET	5	5	5			
16	90605–502U1	PLUG, BLIND	1	1	1			
17	F2C–U517C–01	LOCK, LID	1	1	1			
18	90119–059U4	BOLT, WITH WASHER	2	2	2			
19	F2C–U518D–00	PACKING	1	1	1			
20	F2C–U517D–00	HINGE, LID	1	1	1			
21	F1W–6514S–00	DAMPER ASSY	1	1	1			
22	F1W–6514T–00	.COVER, DAMPER	1	1	1			
23	1UA–82591–00	.BAND	1	1	1			
24	90109–06218	.BOLT	1	1	1			
25	95720–06300	.NUT, SELF-LOCKING	1	1	1			
26	90109–06218	BOLT	1	1	1			
27	9572R–06300	NUT, NYLON	1	1	1			

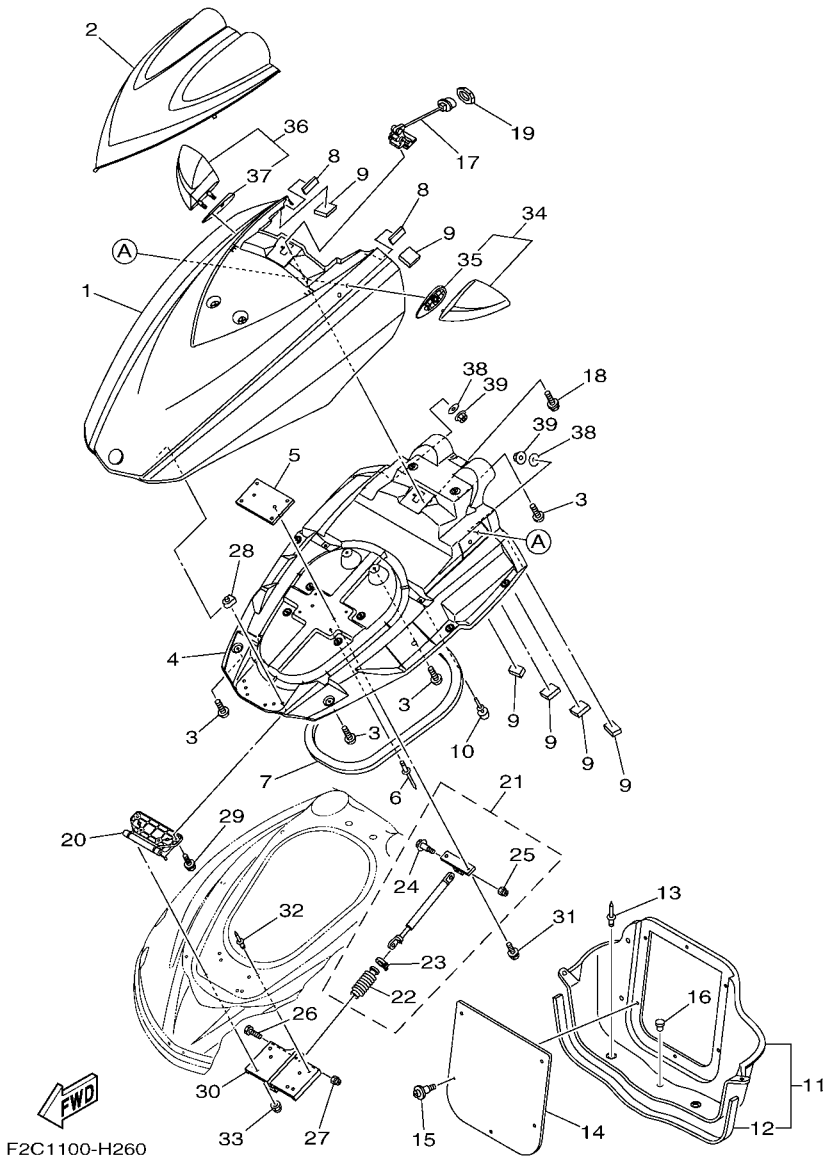

FIG. 26 ENGINE HATCH 2

REF. NO.	PART NO.	DESCRIPTION	CAN	EUR	GENE			REMARKS
28	90183–06902	NUT, SPRING	4	4	4			
29	90119–069UK	BOLT, WITH WASHER	4	4	4			
30	F1W–U518E–02	PLATE, HINGE LID	1	1	1			
31	90119–069UH	BOLT, WITH WASHER	2	2	2			
32	90267–48020	RIVET, BLIND	4	4	4			
33	9572R–06300	NUT, NYLON	4	4	4			
34	F2C–U596B–00	MIRROR LH	1	1	1			
35	F2C–U471E–00	.SPACER 1	1	1	1			
36	F2C–U596C–00	MIRROR RH	1	1	1			
37	F2C–U471F–00	.SPACER 2	1	1	1			
38	9299R–08200	WASHER	4	4	4			
39	9572R–08300	NUT, FLANGE	4	4	4			

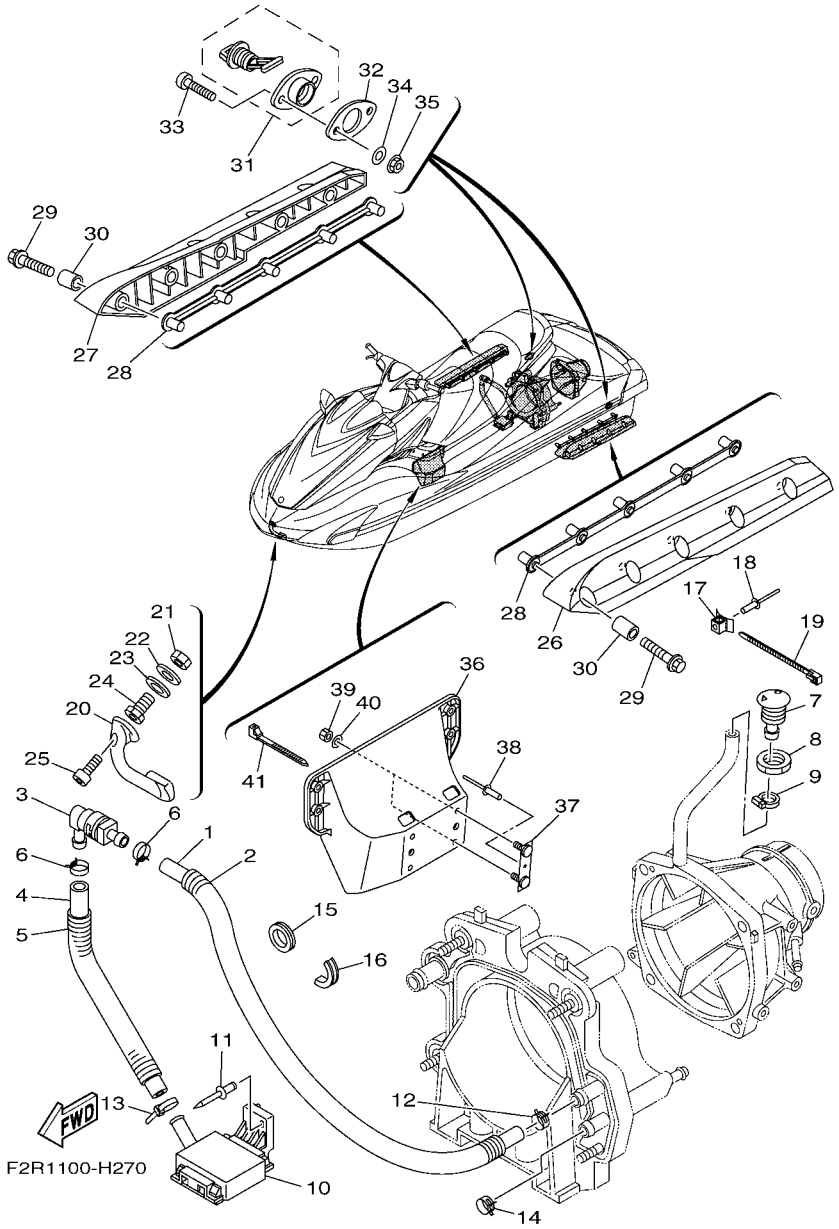

FIG. 27 HULL & DECK

REF. NO.	PART NO.	DESCRIPTION	CAN	EUR	GENE			REMARKS
1	90445–20804	HOSE (L860)	1	1	1			
2	90446–27M73	HOSE (L700)	1	1	1			
3	68N–5112T–00	JOINT, HOSE	1	1	1			
4	90445–20800	HOSE (L500)	1	1	1			
5	90446–27M55	TUBE (L400)	1	1	1			
6	90467–18804	CLIP	2	2	2			
7	F1W–U269B–00	SPOUT	1	1	1			
8	EU0–61652–00	NUT	1	1	1			
9	90601–118UF	BAND, HOSE 18	1	1	1			
10	F1B–U761D–02	STRAINER, BILGE	1	1	1			
11	90267–489U8	RIVET, BLIND	1	1	1			
12	90467–21800	CLIP	1	1	1			
13	90601–200U1	BAND	1	1	1			
14	90467–200A0	CLIP	1	1	1			
15	90480–38800	GROMMET	1	1	1			
16	F1S–U828H–01	TRIM, 1	1	1	1			
17	90600–91736	CLAMP COMP.	2	2	2			
18	90267–48802	RIVET, BLIND	2	2	2			
19	90464–32801	CLAMP	2	2	2			
20	F1K–61624–00	BOWEYE 1	1	1	1			
21	99780–12600	NUT.HEX.(COARS)	2	2	2			
22	92990–12200	WASHER, PLAIN	2	2	2			
23	F0X–61637–00	WASHER	2	2	2			
24	F0X–61652–00	NUT (BOLT/NUT)	2	2	2			
25	90110–06040	BOLT, HEXAGON SOCKET HEAD	2	2	2			
26	F1S–U883N–01	STABILIZER LH	1	1	1			BLACK
27	F1S–U883P–01	STABILIZER RH	1	1	1			BLACK

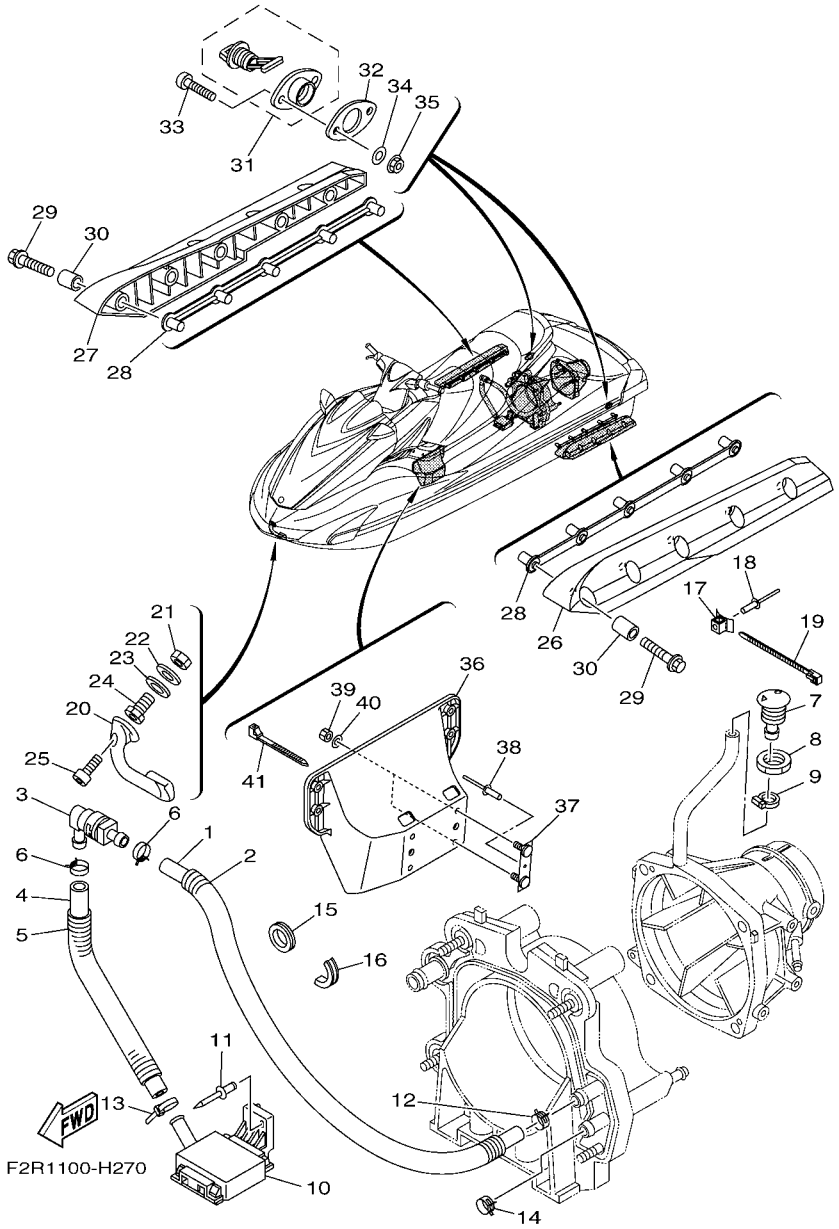

FIG. 27 HULL & DECK

REF. NO.	PART NO.	DESCRIPTION	CAN	EUR	GENE			REMARKS
28	F1X–U883T–00	BRACKET,STABILIZER	2	2	2			
29	90105–08860	BOLT, FLANGE	10	10	10			
30	F1K–U8169–00	SPACER	10	10	10			
31	F1S–U2280–00	DRAIN PLUG ASSY.	2	2	2			
32	F1S–U2285–00	PACKING, DRAIN	2	2	2			
33	9788R–05025	SCREW, PAN HEAD	4	4	4			
34	9299R–05200	WASHER	4	4	4			
35	9572R–05300	NUT, FLANGE	4	4	4			
36	F1W–U8572–01	BRACKET 2	1	1	1			
37	F1K–U826C–02	BRACKET	2	2	2			
38	90267–489U1	RIVET,BLIND	2	2	2			
39	9572R–08300	NUT, FLANGE	4	4	4			
40	9299R–08200	WASHER	4	4	4			
41	90464–32801	CLAMP	1	1	1			

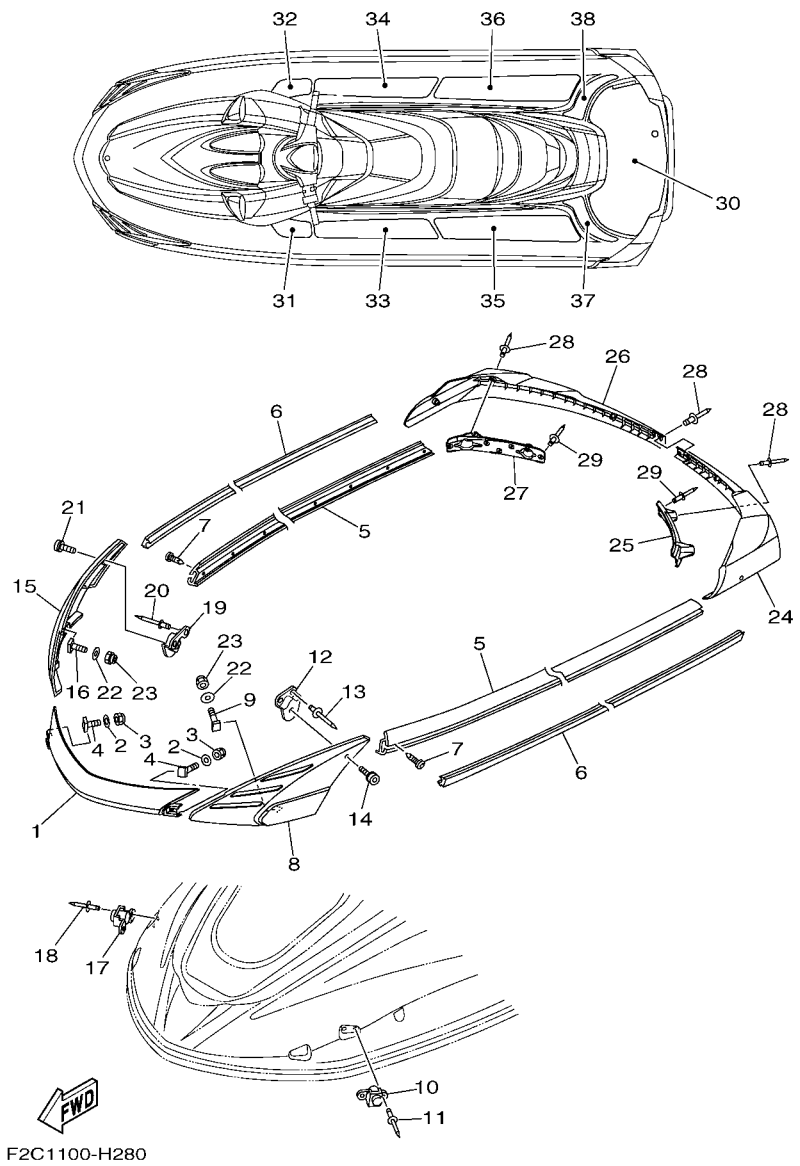

FIG. 28 GUNWALE & MAT

REF. NO.	PART NO.	DESCRIPTION	CAN	EUR	GENE			REMARKS
1	F2C–U2511–00	GUNWALE, BOW	1	1	1			GRAY
2	9299R–06200	WASHER	4	4	4			
3	9572R–06300	NUT, NYLON	4	4	4			
4	F1W–U491K–00	BOLT, SPECIAL	4	4	4			
5	F1B–U2512–00	GUNWALE, SIDE	2	2	2			LIGHT SILVER 1
6	F1B–U2519–10	INNER,GUNWALE	2	2	2			YAMAHA BLACK
7	90169–059U1	SCREW,TAPPING	36	36	36			
8	F1W–U252E–10	JOINT, GUNWALE LH	1	1	1			GRAY
9	F1W–U491K–00	BOLT, SPECIAL	2	2	2			
10	F1W–U250B–00	GROMMET ASSY	1	1	1			
11	90267–489U6	RIVET, BLIND	2	2	2			
12	F1W–U4949–00	BRACKET	1	1	1			
13	90267–489U6	RIVET, BLIND	2	2	2			
14	90111–06114	BOLT,HEX. SOCKET BUTTON	1	1	1			
15	F1W–U252F–10	JOINT, GUNWALE RH	1	1	1			GRAY
16	F1W–U491K–00	BOLT, SPECIAL	2	2	2			
17	F1W–U250B–00	GROMMET ASSY	1	1	1			
18	90267–489U6	RIVET, BLIND	2	2	2			
19	F1W–U4949–00	BRACKET	1	1	1			
20	90267–489U6	RIVET, BLIND	2	2	2			
21	90111–06114	BOLT,HEX. SOCKET BUTTON	1	1	1			
22	9299R–06200	WASHER	4	4	4			
23	9572R–06300	NUT, NYLON	4	4	4			
24	F1W–U251D–10	GUNWALE, STERN 1	1	1	1			GRAY
25	F1W–U251L–01	BRACKET, GUNWALE 1	1	1	1			
26	F1W–U251E–10	GUNWALE, STERN 2	1	1	1			GRAY
27	F1W–U251M–01	BRACKET, GUNWALE 2	1	1	1			

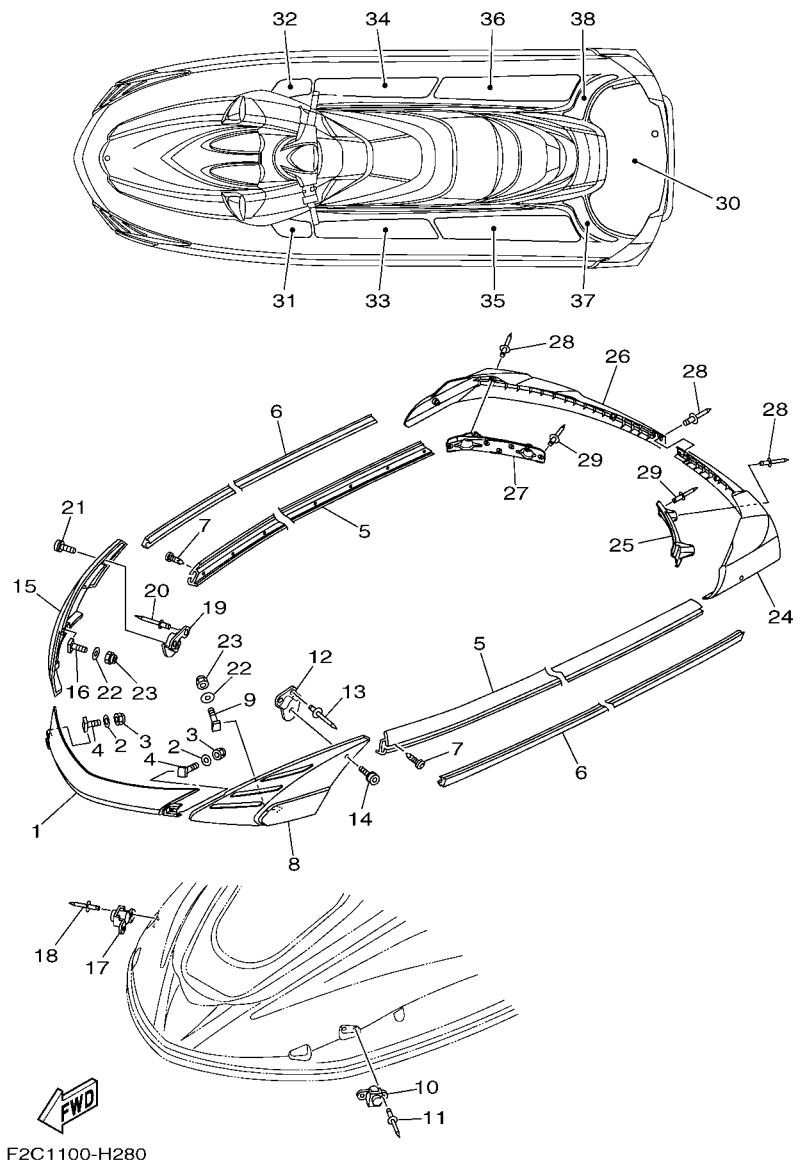

FIG. 28 GUNWALE & MAT

REF. NO.	PART NO.	DESCRIPTION	CAN	EUR	GENE			REMARKS
28	90267–48825	RIVET, BLIND	9	9	9			
29	90267–489U8	RIVET, BLIND	10	10	10			
30	F2C–U3581–00	MAT, UPPER	1	1	1			DARK GRAY
31	F2C–U351H–00	MAT, STEP 1	1	1	1			DARK GRAY
32	F2C–U351J–00	MAT, STEP 2	1	1	1			DARK GRAY
33	F2C–U351K–00	MAT, STEP 3	1	1	1			DARK GRAY
34	F2C–U351M–00	MAT, STEP 4	1	1	1			DARK GRAY
35	F2C–U351N–00	MAT, STEP 5	1	1	1			DARK GRAY
36	F2C–U351P–00	MAT, STEP 6	1	1	1			DARK GRAY
37	F2C–U351R–00	MAT, STEP 7	1	1	1			DARK GRAY
38	F2C–U351S–00	MAT, STEP 8	1	1	1			DARK GRAY

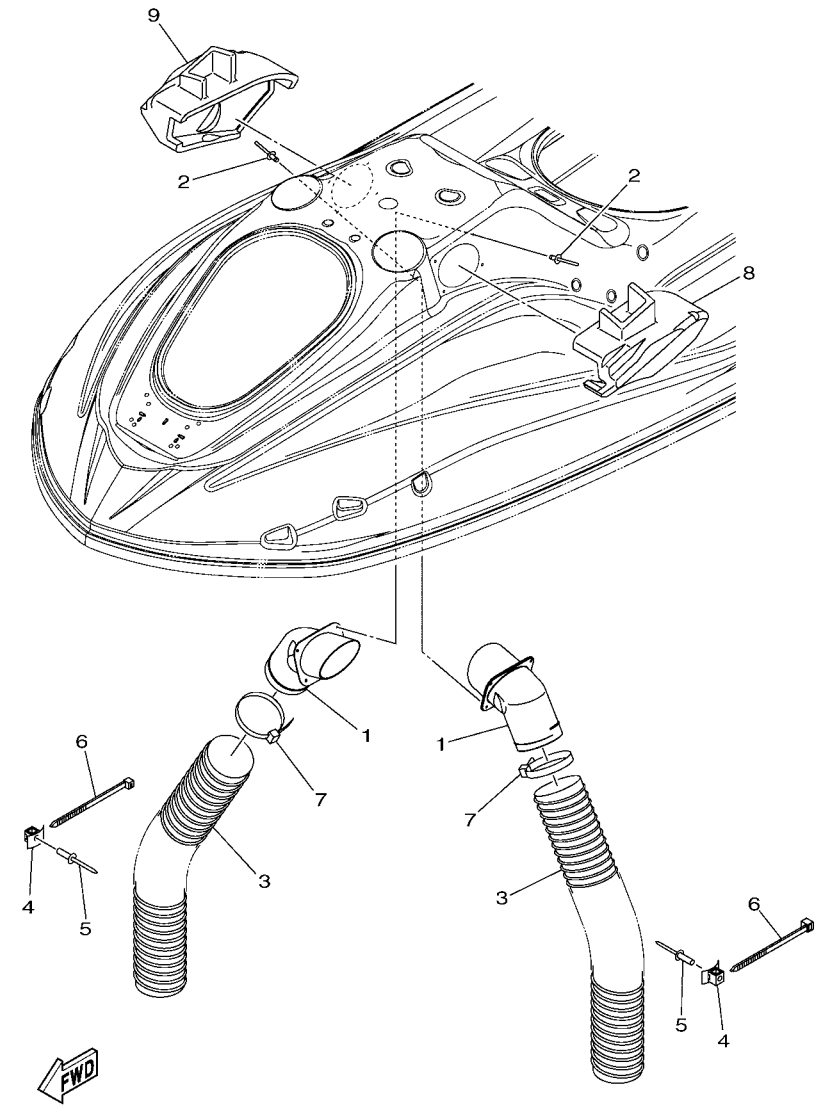

F2C1100-H290

FIG. 29 VENTILATION

REF. NO.	PART NO.	DESCRIPTION	CAN	EUR	GENE			REMARKS
1	F1W–U2127–00	BASE, AIR INTAKE	2	2	2			
2	90267–48806	RIVET, BLIND	8	8	8			
3	F0X–U213G–01	HOSE, VENTILATOR 2	2	2	2			
4	90600–91736	CLAMP COMP.	3	3	3			
5	90267–489U6	RIVET, BLIND	2	2	2			
6	90464–99804	CLAMP	2	2	2			
7	90601–200U7	BAND	2	2	2			
8	F2C–U2187–00	BOX, INDUCTION 1 (LH)	1	1	1			
9	F2C–U2188–00	BOX, INDUCTION 2 (RH)	1	1	1			

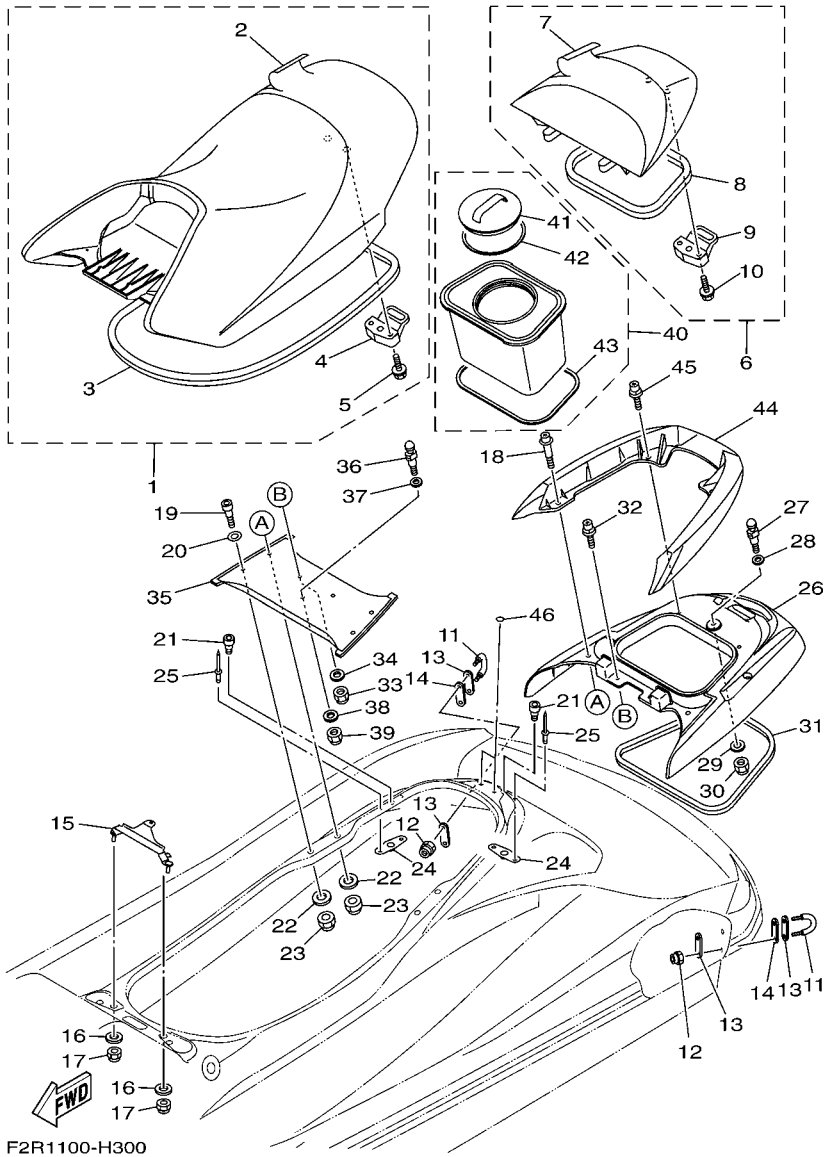

FIG. 30 SEAT & UNDER LOCKER

REF. NO.	PART NO.	DESCRIPTION	CAN	EUR	GENE			REMARKS
1	F2C–U371A–00	DOUBLE SEAT ASSY	1	1	1			
2	F2C–U371B–00	.COVER, SEAT 1	1	1	1			
3	F1W–U2664–01	.PACKING	1	1	1			
4	F1B–U3850–02	.SEAT LOCK ASSY	1	1	1			
5	90119–069UP	.BOLT, WITH WASHER	2	2	2			
6	F2R–U372A–00	SINGLE SEAT ASSY	1	1	1			
7	F2R–U372B–00	.COVER, SEAT	1	1	1			
8	F2C–U266D–00	.PACKING 5	1	1	1			
9	F2C–U3850–00	.SEAT LOCK ASSY	1	1	1			
10	90119–069UP	.BOLT, WITH WASHER	2	2	2			
11	F1K–61628–00	STERN EYE	2	2	2			
12	9572R–08300	NUT, FLANGE	4	4	4			
13	GP7–U4953–10	PLATE A	4	4	4			
14	F1B–U1653–01	PACKING	2	2	2			
15	F2C–U378C–00	STAY, SEAT 1	1	1	1			
16	90201–099U3	WASHER, PLATE	2	2	2			
17	9572R–08300	NUT, FLANGE	2	2	2			
18	F2C–U2624–01	BOLT	2	2	2			
19	F2C–U2624–20	BOLT	2	2	2			
20	9299R–10200	WASHER	2	2	2			
21	F2C–U2624–10	BOLT	3	3	3			
22	9299R–08200	WASHER	4	4	4			
23	9572R–08300	NUT, FLANGE	4	4	4			
24	F2C–U826C–00	BRACKET	3	3	3			
25	90267–489U1	RIVET,BLIND	6	6	6			
26	F2C–U8952–01	BEAM, DECK 1	1	1	1			
27	GH1–U3774–00	PIN	1	1	1			

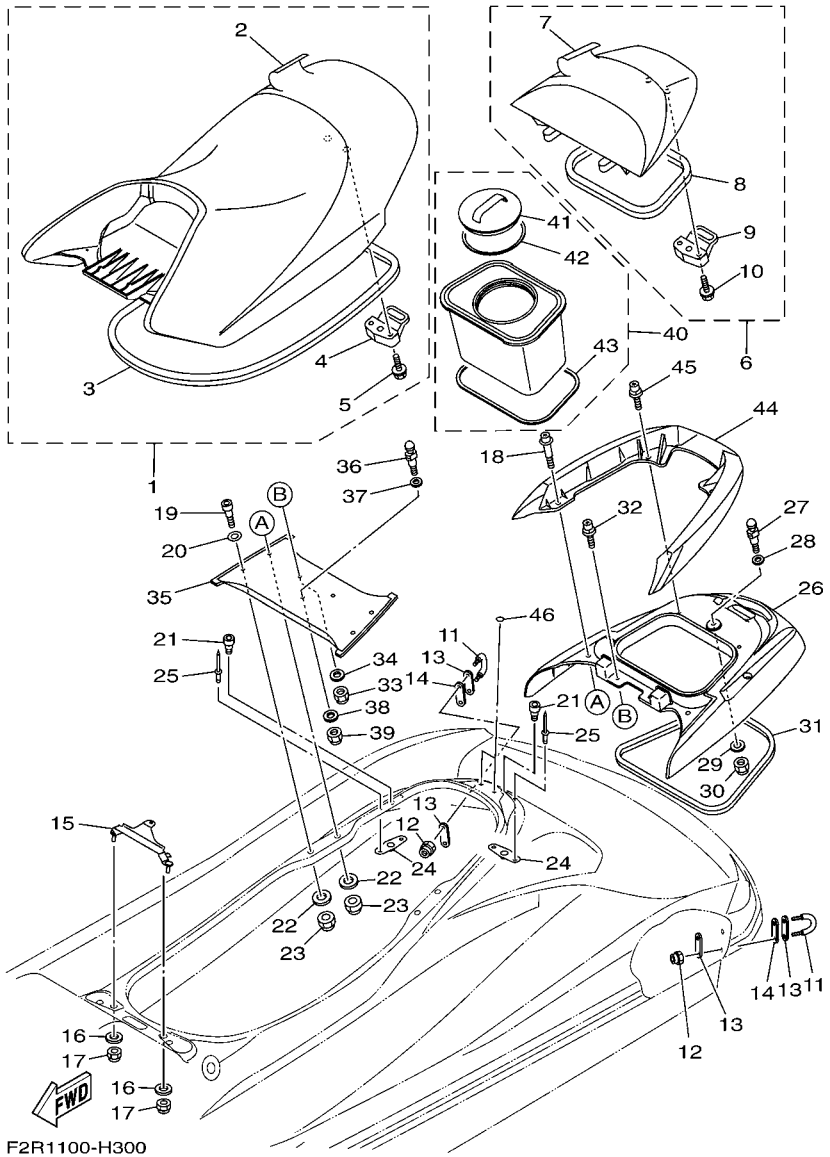

FIG. 30 SEAT & UNDER LOCKER

REF. NO.	PART NO.	DESCRIPTION	CAN	EUR	GENE			REMARKS
28	90201–109U6	WASHER, PLATE	1	1	1			
29	9299R–10200	WASHER	1	1	1			
30	9572R–10300	NUT, FLANGE	1	1	1			
31	F2C–U375E–00	PACKING 1	1	1	1			
32	F2C–U2624–30	BOLT	2	2	2			
33	9572R–08300	NUT, FLANGE	2	2	2			
34	9299R–08200	WASHER	2	2	2			
35	F2C–U8952–10	BEAM, DECK 1	1	1	1			
36	GH1–U3774–00	PIN	1	1	1			
37	90201–109U6	WASHER, PLATE	1	1	1			
38	9299R–10200	WASHER	1	1	1			
39	9572R–10300	NUT, FLANGE	1	1	1			
40	F2C–U591A–02	CASE,ASSY 1	1	1	1			
41	F2C–U591C–00	.CAP,CASE	1	1	1			
42	F2C–U591D–01	.PACKING,CASE	1	1	1			
43	F2C–U266E–00	.PACKING,6	1	1	1			
44	F2R–U271B–00	GRIP, HAND	1	1	1			
45	F2C–U2624–30	BOLT	2	2	2			
46	F2R–U884B–00	SEAL 1	2	2	2			

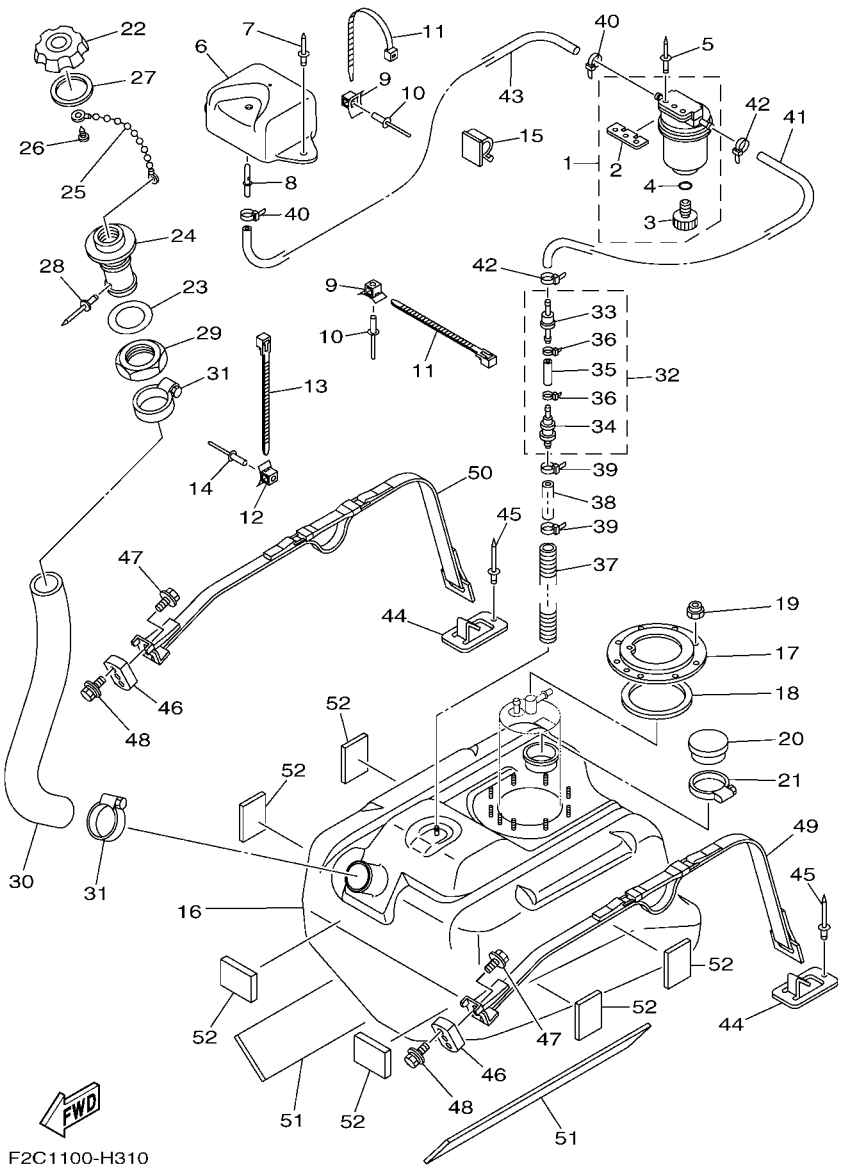

FIG. 31 FUEL TANK

REF. NO.	PART NO.	DESCRIPTION	CAN	EUR	GENE			REMARKS
1	F2F–6214A–00	FILTER, VENT ASSY	1	1	1			
2	EW2–62142–00	.PLATE, FILTER	1	1	1			
3	70R–24543–00	.PLUG, DRAIN	1	1	1			
4	70R–24489–00	.O-RING	1	1	1			
5	90267–489U2	RIVET, BLIND	2	2	2			
6	F1W–U2159–00	SOCKET, VENTILATION	1	1	1			
7	90267–489U6	RIVET, BLIND	2	2	2			
8	F1G–62149–00	PIPE, VENTILATION	1	1	1			
9	90600–91736	CLAMP COMP.	3	3	3			
10	90267–489U6	RIVET, BLIND	3	3	3			
11	90464–32801	CLAMP	3	3	3			
12	90600–91736	CLAMP COMP.	2	2	2			
13	90464–32801	CLAMP	2	2	2			
14	90267–489U6	RIVET, BLIND	2	2	2			
15	90464–17800	CLAMP	1	1	1			
16	F1W–U7711–01	TANK, FUEL	1	1	1			
17	F1B–U7773–00	RING	1	1	1			
18	F1B–67747–00	PACKING, SEAL	1	1	1			
19	9572R–06300	NUT, NYLON	9	9	9			
20	FN8–6771K–00	COVER	1	1	1			
21	90601–162U5	BAND, HOSE 62	1	1	1			
22	GP7–U7831–11	CAP, FUEL FILLER	1	1	1			BLACK
23	GP7–U7834–10	PACKING FUEL FILLER	1	1	1			
24	GP7–U7833–11	SOCKET	1	1	1			BLACK
25	GP7–U7835–00	CHAIN BALL	1	1	1			
26	90169–049U1	TAPPING SCREW	1	1	1			
27	GP7–U7832–01	PACKING	1	1	1			

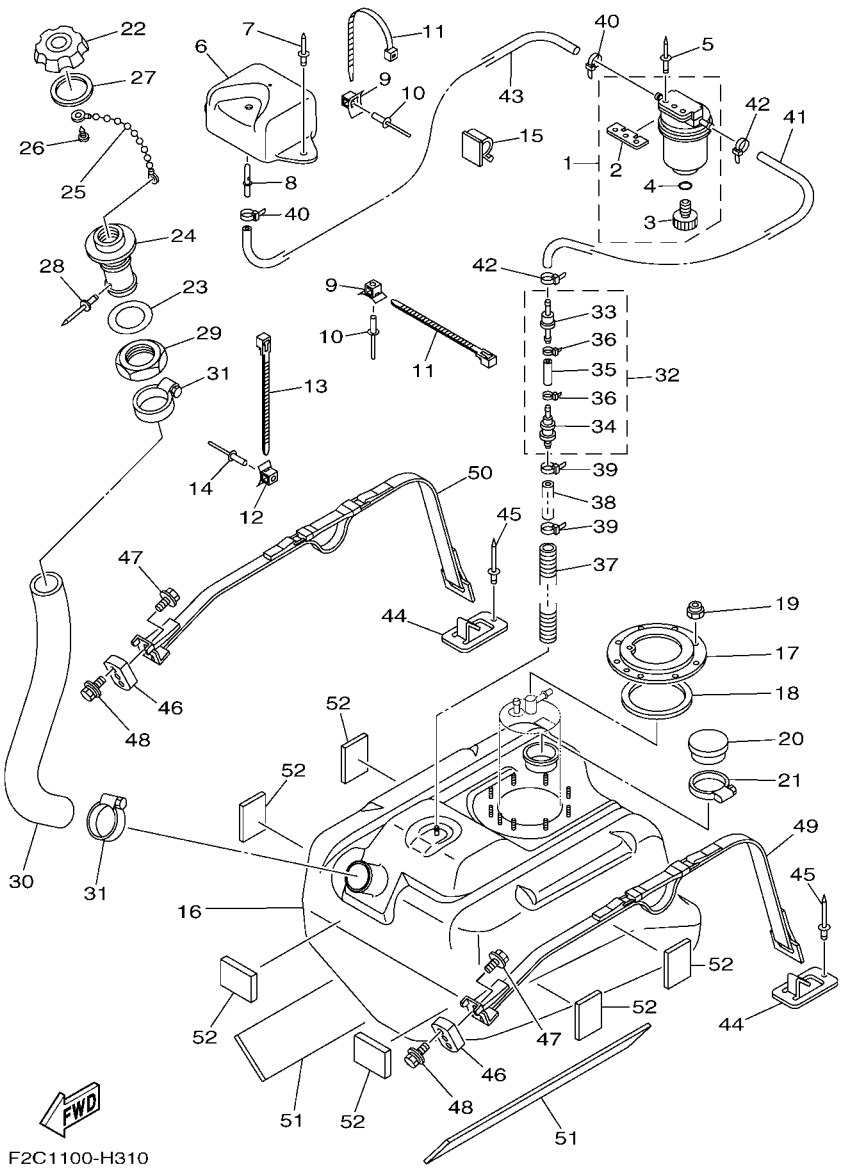

FIG. 31 FUEL TANK

REF. NO.	PART NO.	DESCRIPTION	CAN	EUR	GENE			REMARKS
28	90267–329UR	RIVET, BLIND	1	1	1			
29	GP7–U783F–00	NUT, FUEL FILLER	1	1	1			
30	F2C–U7844–00	HOSE	1	1	1			
31	90601–155U4	BAND, HOSE 55	2	2	2			
32	F1B–62150–00	AIR, VENT ASSY	1	1	1			
33	F1B–67767–00	.CHECK VALVE	1	1	1			
34	FJ0–67766–00	.ROLL OVER VALVE	1	1	1			
35	90699–50004	.HOSE (L40)	1	1	1			
36	90465–11M10	.CLAMP	2	2	2			
37	90447–22804	TUBE	1	1	1			
38	F2C–U785H–00	HOSE, AIR VENT 3	1	1	1			
39	90465–11829	CLAMP	2	2	2			
40	90465–11829	CLAMP	2	2	2			
41	F2C–U785G–00	HOSE, AIR VENT	1	1	1			
42	90465–11829	CLAMP	2	2	2			
43	F0D–U7856–10	HOSE, AIR VENT 3	1	1	1			
44	F1K–U5772–02	HOOK A	2	2	2			
45	90267–489U1	RIVET,BLIND	2	2	2			
46	F1X–U2873–00	NUT, SPECIAL	2	2	2			
47	90119–089U7	BOLT, WITH WASHER	2	2	2			
48	90119–069UH	BOLT, WITH WASHER	4	4	4			
49	F2C–67743–00	BELT, TANK 1	1	1	1			
50	F2C–67743–10	BELT, TANK 1	1	1	1			
51	F1W–U759B–00	MAT 1	2	2	2			
52	F1W–U759C–01	MAT 2	6	6	6			

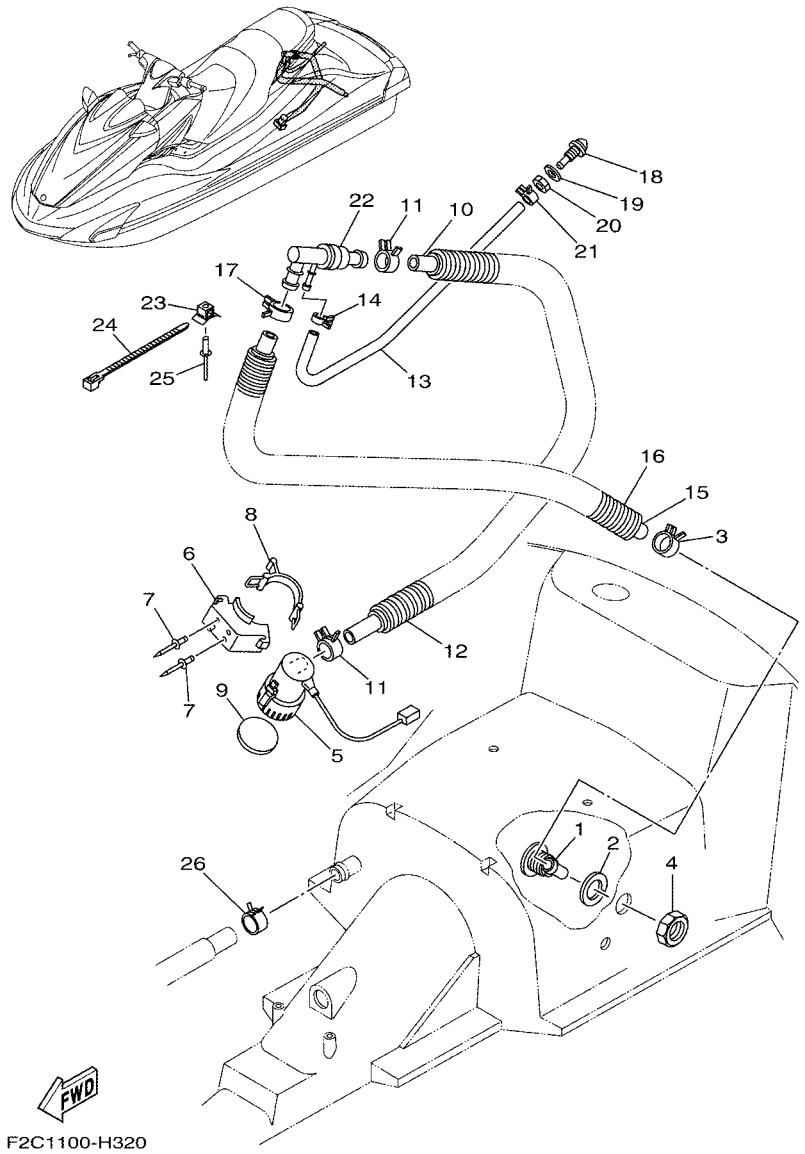

FIG. 32 BILGE PUMP

REF. NO.	PART NO.	DESCRIPTION	CAN	EUR	GENE			REMARKS
1	F1W–U224E–00	BODY, DRAIN 3	1	1	1			
2	F1S–U7525–01	PACKING	1	1	1			
3	90467–26800	CLIP	1	1	1			
4	F1B–62241–00	DRAIN, COCKPIT	1	1	1			
5	F1B–U8360–01	BILGE PUMP ASSY	1	1	1			
6	F1B–U7698–01	BRACKET	1	1	1			
7	90267–489UP	RIVET, BLIND	2	2	2			
8	GA7–68218–00	BAND, BATTERY	1	1	1			
9	F1B–U7656–00	PACKING, BILGE	1	1	1			
10	F1B–U7626–00	HOSE 1	1	1	1			
11	90467–25801	CLIP	2	2	2			
12	90447–28004	HOSE, WITH SPRING (L800)	1	1	1			
13	F1W–U7629–00	HOSE, DRAIN 2	1	1	1			
14	90467–14803	CLIP	1	1	1			
15	F1B–U7628–00	HOSE, DRAIN 3	1	1	1			
16	90447–28004	HOSE, WITH SPRING (L800)	1	1	1			
17	90467–26800	CLIP	1	1	1			
18	GH7–6753B–00	PILOT,WATER	1	1	1			
19	90430–16910	GASKET	1	1	1			
20	GP7–61652–00	NUT	1	1	1			
21	90467–14803	CLIP	1	1	1			
22	F1S–67620–00	HOSE JOINT	1	1	1			
23	90600–91736	CLAMP COMP.	1	1	1			
24	F2C–U4256–00	CLAMP	1	1	1			
25	90267–489U6	RIVET, BLIND	1	1	1			
26	90467–26800	CLIP	1	1	1			

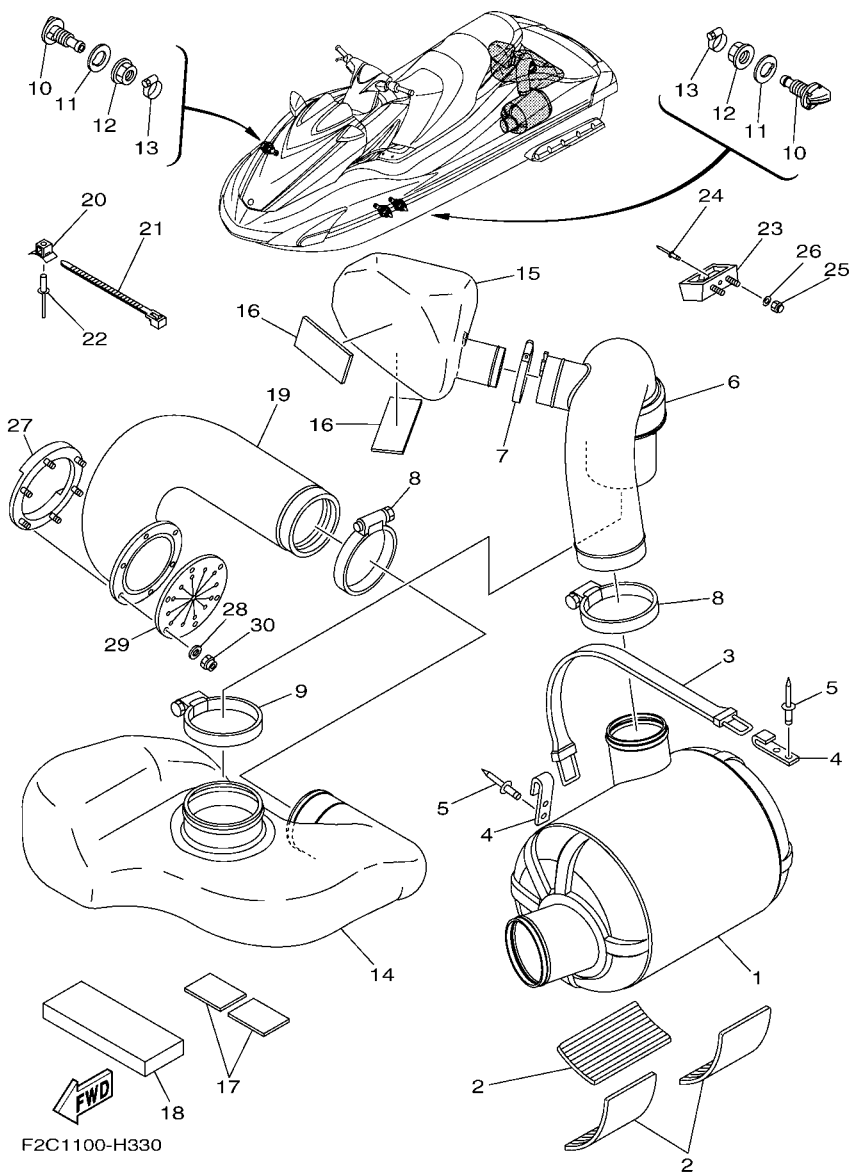

FIG. 33 EXHAUST 3

REF. NO.	PART NO.	DESCRIPTION	CAN	EUR	GENE			REMARKS
1	F1W–U7550–00	WATER LOCK COMP.	1	1	1			
2	F1S–U8221–00	PAD, BATTERY	3	3	3			
3	EW2–67821–00	BAND, FUEL TANK	1	1	1			
4	GA7–65772–00	HOOK A	2	2	2			
5	90267–489U1	RIVET,BLIND	4	4	4			
6	F1W–U7555–00	HOSE, EXHAUST	1	1	1			
7	90601–170UG	BAND, HOSE 70	1	1	1			
8	90450–99801	HOSE CLAMP ASSY	2	2	2			
9	90450–99804	HOSE CLAMP ASSY	1	1	1			
10	F1K–6753B–00	PILOT, WATER	3	3	3			
11	F1B–67564–00	GASKET	3	3	3			
12	F0X–62733–00	NUT	3	3	3			
13	90467–17802	CLIP	3	3	3			
14	F1W–U4261–00	TANK, WATER	1	1	1			
15	F1W–U753C–01	RESONATOR 1	1	1	1			
16	F1K–U759C–00	MAT 2	2	2	2			
17	F1W–U759C–01	MAT 2	2	2	2			
18	F1W–U8831–01	BED,TANK 1	1	1	1			
19	F1B–U758D–02	HOSE,EXHAUST 3	1	1	1			
20	90600–91736	CLAMP COMP.	1	1	1			
21	90464–32801	CLAMP	1	1	1			
22	90267–48802	RIVET, BLIND	1	1	1			
23	F1B–6774J–00	BRKT, BAND	1	1	1			
24	90267–489UE	RIVET, BLIND	1	1	1			
25	9572R–06300	NUT, NYLON	2	2	2			
26	9299R–06200	WASHER	2	2	2			
27	F1S–U757B–00	PLATE	1	1	1			

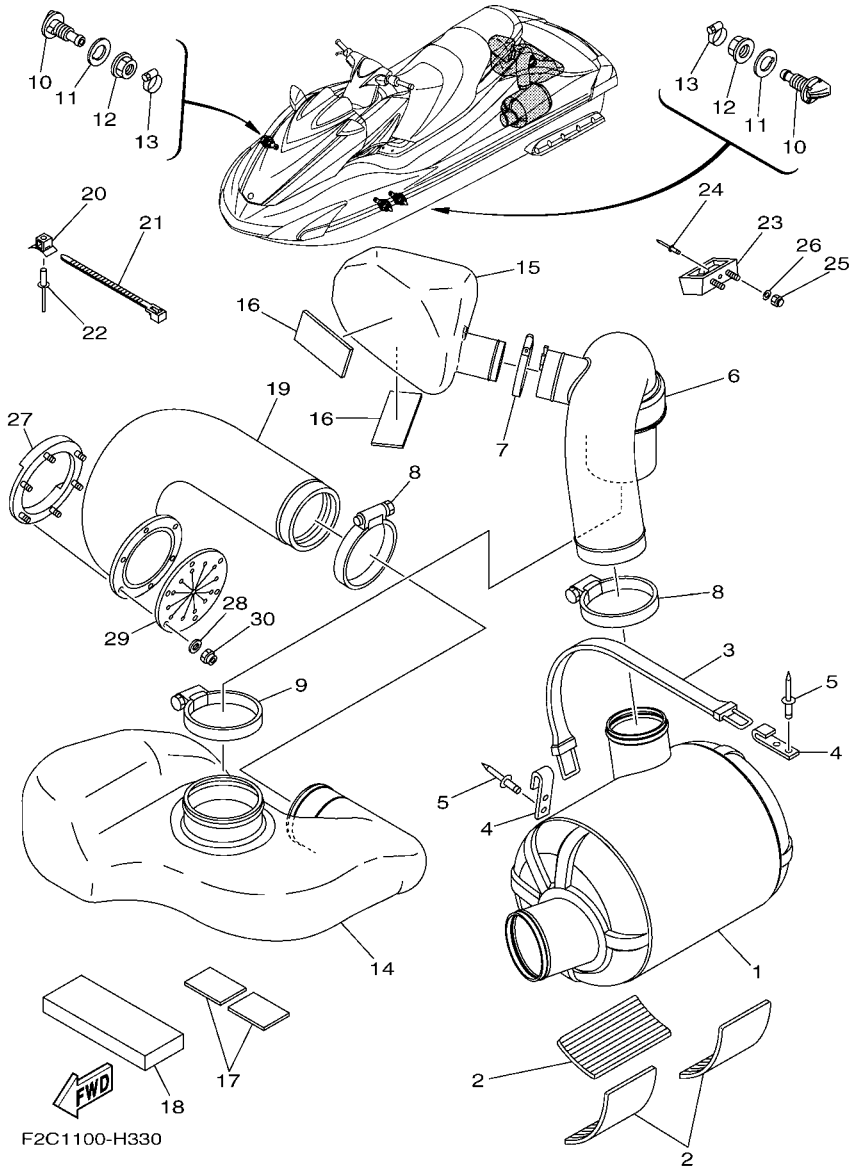

FIG. 33 EXHAUST 3

REF. NO.	PART NO.	DESCRIPTION	CAN	EUR	GENE			REMARKS
28	9299R–06200	WASHER	6	6	6			
29	F1B–U751G–00	VALVE, EXHAUST	1	1	1			
30	9572R–06300	NUT, NYLON	6	6	6			

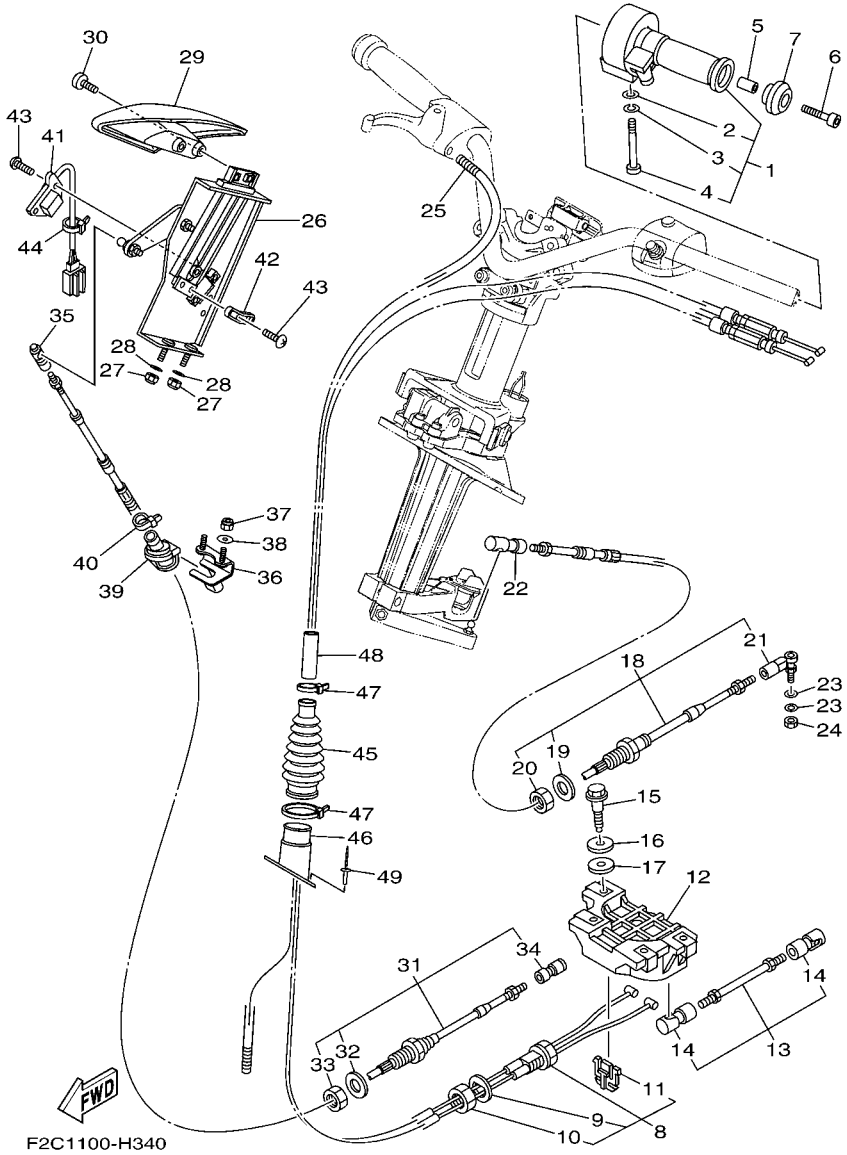

FIG. 34 CONTROL CABLE

REF. NO.	PART NO.	DESCRIPTION	CAN	EUR	GENE			REMARKS
1	F1W–6153A–00	NOZZLE,CONTROL ASSY	1	1	1			
2	92990–06200	.WASHER, PLAIN	1	1	1			
3	92990–06100	.WASHER, SPRING	1	1	1			
4	F1W–613C1–00	.SCREW	1	1	1			
5	90387–05800	COLLAR	1	1	1			
6	90110–05908	BOLT, HEXAGON SOCKET HEAD	1	1	1			
7	GP7–U155F–00	GRIP, END	1	1	1			
8	F2C–6153E–00	CABLE,NOZZLE CONTROL 3	1	1	1			
9	F1W–61438–00	.PACKING	1	1	1			
10	F1B–6151S–00	.NUT	1	1	1			
11	F1W–61557–00	.GUIDE, CABLE	1	1	1			
12	F1W–6153J–00	REMOCON,NOZZLE 2	1	1	1			
13	F1W–6150A–00	ROD ASSY	1	1	1			
14	F1B–61460–00	.BALL JOINT ASSY	2	2	2			
15	90109–06233	BOLT	4	4	4			
16	90201–099U3	WASHER, PLATE	4	4	4			
17	90202–08002	WASHER, PLATE	4	4	4			
18	F2C–61481–00	CABLE, STEERING	1	1	1			
19	F1B–61438–00	.PACKING	1	1	1			
20	F1B–6151S–00	.NUT	1	1	1			
21	F1B–61461–02	.STUD, JOINT BALL	1	1	1			
22	GK5–U146F–00	SHAFT,JOINT BALL	1	1	1			
23	90201–06906	WASHER, PLATE	2	2	2			
24	9538R–06700	NUT	1	1	1			
25	90447–07001	HOSE, WITH SPRING (L400)	1	1	1			
26	F2C–U134A–03	REMOCON. LEVER ASSY.	1	1	1			
27	9572R–06300	NUT, NYLON	2	2	2			

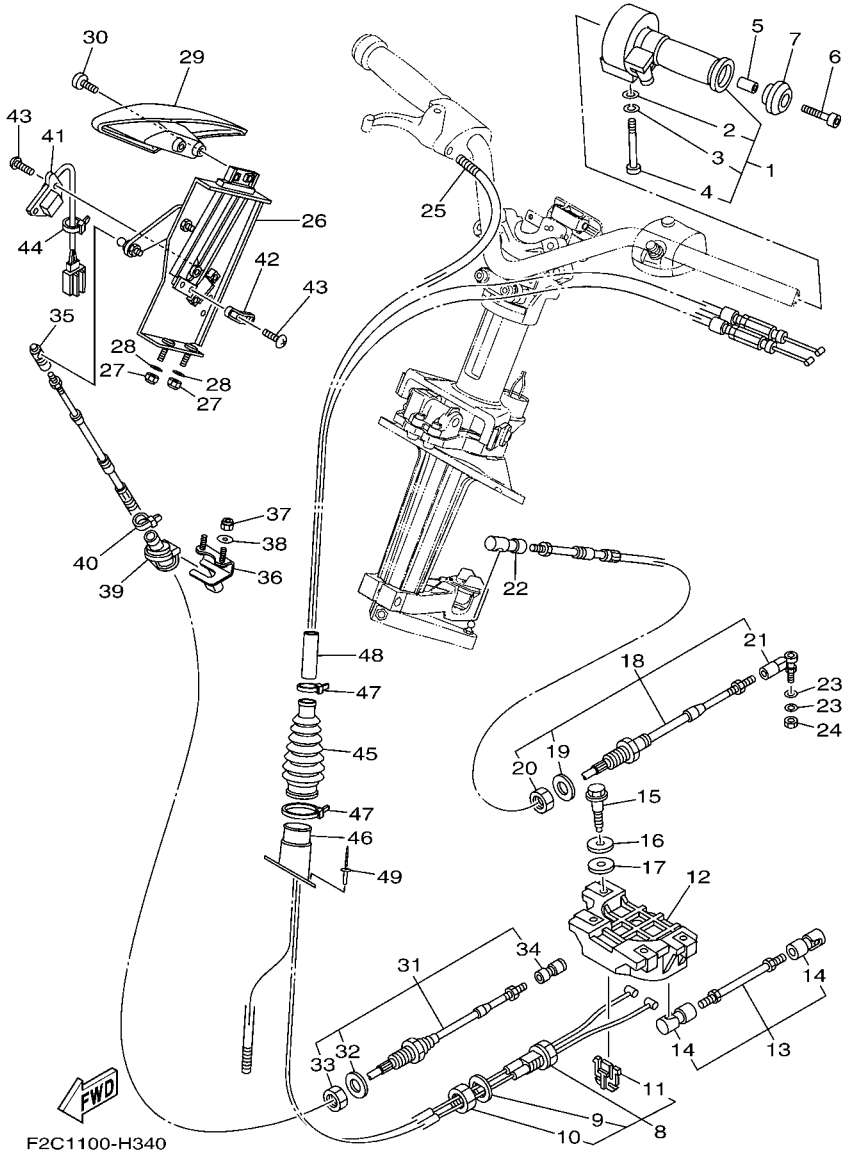

FIG. 34 CONTROL CABLE

REF. NO.	PART NO.	DESCRIPTION	CAN	EUR	GENE			REMARKS
28	9299R–06200	WASHER	2	2	2			
29	F2C–U2714–00	GRIP	1	1	1			
30	90154–06017	SCREW, BINDING	2	2	2			
31	F2C–6149C–00	CABLE,REVERSE	1	1	1			
32	F1B–61438–00	.PACKING	1	1	1			
33	F1B–6151S–00	.NUT	1	1	1			
34	F2C–61460–00	.BALL JOINT ASSY	1	1	1			
35	GK5–U146F–00	SHAFT,JOINT BALL	1	1	1			
36	F2C–U1467–01	BRACKET,STOPPER CABLE	1	1	1			
37	9572R–06300	NUT, NYLON	2	2	2			
38	9299R–06200	WASHER	2	2	2			
39	F2C–U146G–01	PACKING, CABLE	1	1	1			
40	90465–11829	CLAMP	1	1	1			
41	F1W–6830K–00	REVERSE SENSOR ASSY	1	1	1			
42	F2C–6838C–00	MAGNET	1	1	1			
43	90150–05807	SCREW, ROUND HEAD	4	4	4			
44	90465–11829	CLAMP	1	1	1			
45	F2C–U822E–01	GROMMET	1	1	1			
46	F2C–U1465–00	COLLAR, PLASTIC	1	1	1			
47	90464–40825	CLAMP	2	2	2			
48	GJ1–U7578–11	PACKING, HOSE 2	1	1	1			
49	90267–48806	RIVET, BLIND	3	3	3			

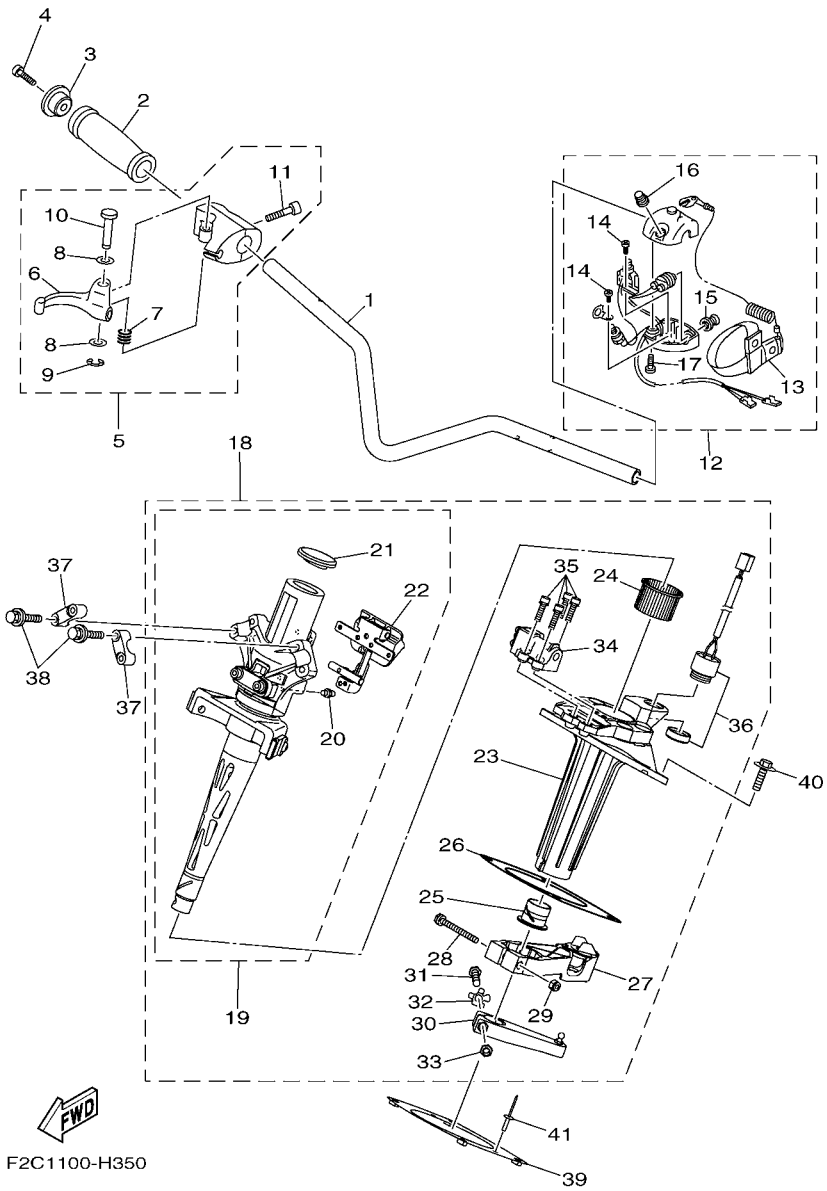

FIG. 35 STEERING 1

REF. NO.	PART NO.	DESCRIPTION	CAN	EUR	GENE			REMARKS
1	F2C–U1552–00	HANDLE	1	1	1			
2	GP7–U155D–01	GRIP, HANDLE	1	1	1			
3	GP7–U155F–00	GRIP, END	1	1	1			
4	90110–05908	BOLT, HEXAGON SOCKET HEAD	1	1	1			
5	F0D–67250–10	THROTTLE LEVER ASSY	1	1	1			
6	F0D–67255–02	.LEVER, THROTTLE	1	1	1			
7	EW2–67256–00	.SPRING	1	1	1			
8	EW2–67258–01	.WASHER	2	2	2			
9	EW2–67259–01	.E-RING	1	1	1			
10	F0D–67257–00	.SHAFT	1	1	1			
11	F1X–6725F–01	.BOLT, THROTTLE	2	2	2			
12	F2C–68310–00	SWITCH BOX ASSY	1	1	1			
13	EW2–68348–00	.LANYARD, STOP SWITCH	1	1	1			
14	97880–03008	.SCREW, PAN HEAD	2	2	2			
15	FK7–68312–02	.STOP BUTTON COMP	1	1	1			
16	FK7–68313–02	.START BUTTON COMP.	1	1	1			
17	97880–05025	.SCREW, PAN HEAD	2	2	2			
18	F2C–61400–00	STEERING MASTER ASSY	1	1	1			
19	F2C–67410–00	.SHAFT ASSY	1	1	1			
20	F2C–6151T–00	..NIPPLE, GREASE	1	1	1			
21	F2C–613B0–00	..CAP	1	1	1			
22	F2C–6287A–00	..LOCK ASSY	1	1	1			
23	F2C–6152M–00	.HOUSING ASSY	1	1	1			
24	F1K–6134M–00	.BUSH	1	1	1			
25	F2C–6134M–00	.BUSH	1	1	1			
26	F2C–6143C–00	.SEAL, RUBBER	1	1	1			
27	F2C–6146A–00	.CABLE STOPPER ASSY.	1	1	1			

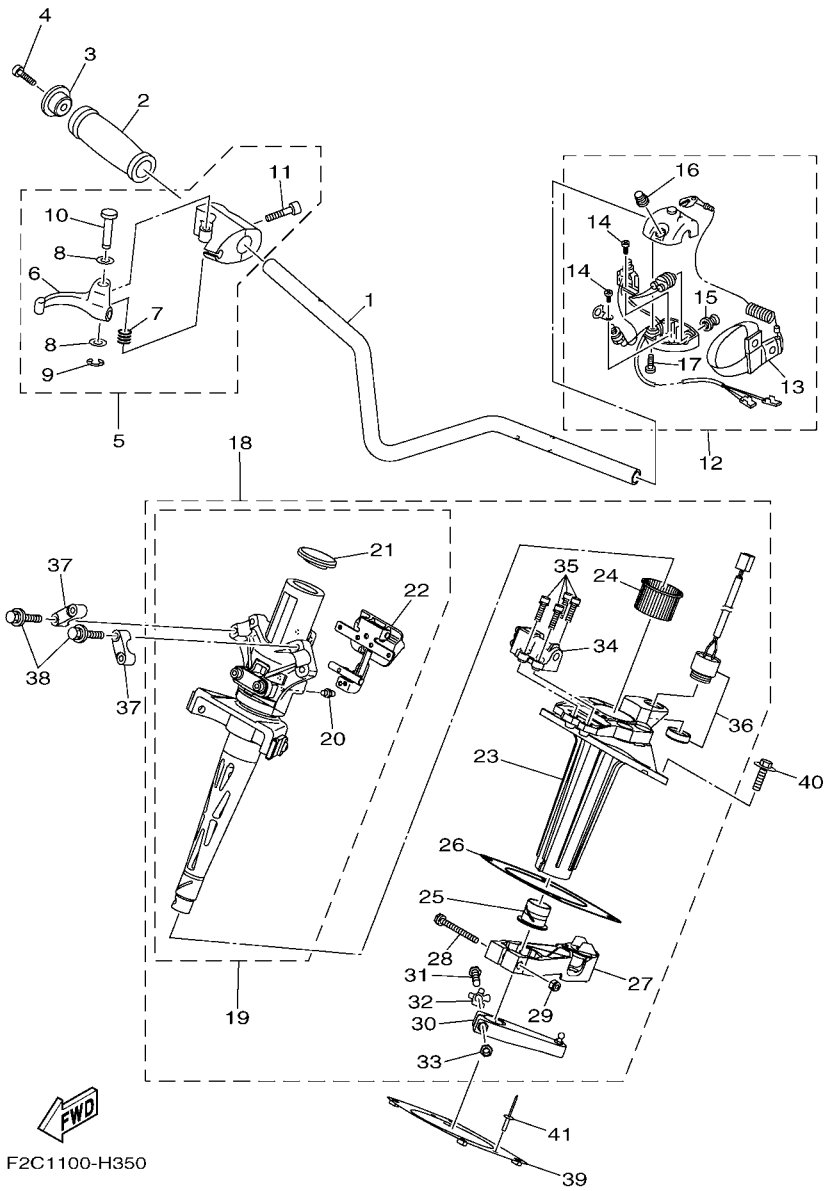

FIG. 35 STEERING 1

REF. NO.	PART NO.	DESCRIPTION	CAN	EUR	GENE			REMARKS
28	F2C–61369–00	.BOLT	1	1	1			
29	95720–06300	.NUT, SELF-LOCKING	1	1	1			
30	F2C–6153R–00	.ARM ASSY.	1	1	1			
31	F1K–61355–00	.BOLT	1	1	1			
32	F1K–6142B–00	.PLATE, RETAINING	1	1	1			
33	95720–06300	.NUT, SELF-LOCKING	1	1	1			
34	F1W–68303–00	.SENSOR ASSY	1	1	1			
35	F1W–61516–00	.BOLT	4	4	4			
36	F1S–68341–00	.BUZZER	1	1	1			
37	EU0–23814–30	HOLDER, HANDLE UPPER	2	2	2			
38	90119–089UU	BOLT, WITH WASHER	4	4	4			
39	F2C–U1554–00	PLATE, RETAINING	1	1	1			
40	90119–08836	BOLT, WITH WASHER	4	4	4			
41	90267–48806	RIVET, BLIND	2	2	2			

FIG. 36 STEERING 2

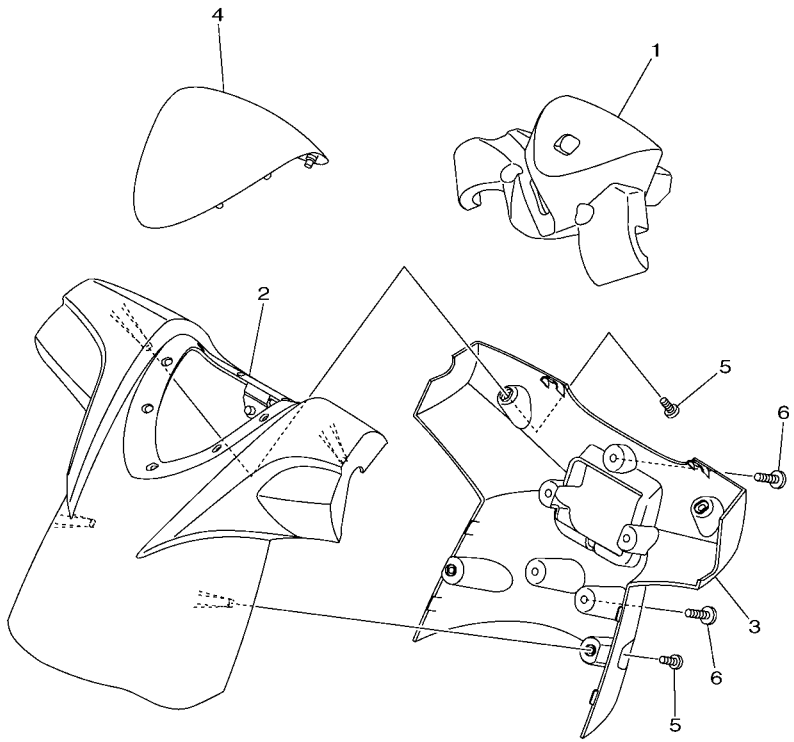

F2C1100-H360

REF. NO.	PART NO.	DESCRIPTION	CAN	EUR	GENE			REMARKS
1	F2C–U156E–00	PAD 1	1	1	1			
2	F2C–U143D–01	PAD, STEERING 1	1	1	1			
3	F2C–U143E–00	PAD, STEERING 2	1	1	1			
4	F1K–U142D–00	COVER, PAD	1	1	1			
5	90154–06017	SCREW, BINDING	4	4	4			
6	90149–05903	SCREW	5	5	5			

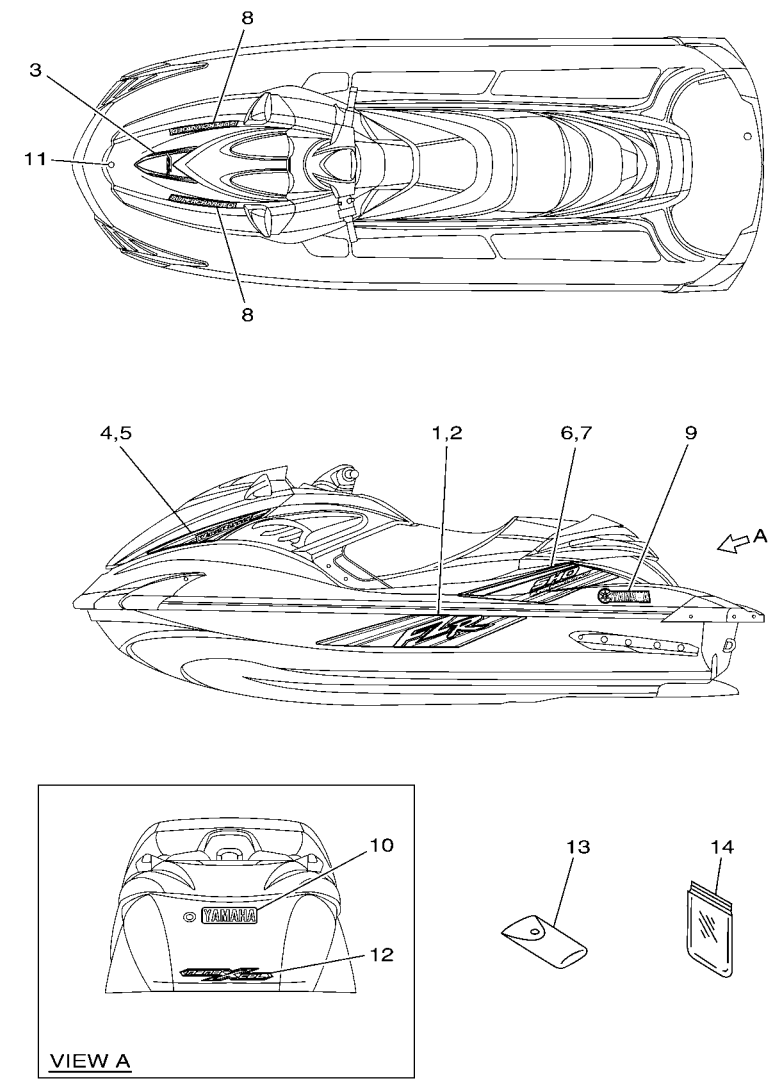

F2R1100-H370

FIG. 37 GRAPHICS

REF. NO.	PART NO.	DESCRIPTION	CAN	EUR	GENE			REMARKS
1	F2R–U417B–00	GRAPHIC 1(LH)	1	1	1			
2	F2R–U417C–00	GRAPHIC 2(RH)	1	1	1			
3	F2R–U417D–00	GRAPHIC 3	1	1	1			
4	F2R–U417F–00	GRAPHIC 5(LH)	1	1	1			
5	F2R–U417G–00	GRAPHIC 6(RH)	1	1	1			
6	F2R–U417H–00	GRAPHIC 7(LH)	1	1	1			
7	F2R–U417J–00	GRAPHIC 8(RH)	1	1	1			
8	F2C–U417M–10	GRAPHIC C	2	2	2			
9	F1X–U411C–50	EMBLEM, YAMAHA	2	2	2			
10	F1X–U4114–50	MARK, YAMAHA A	1	1	1			
11	F1K–U411H–00	EMBLEM, TUNING FORK	1	1	1			
12	F1W–U4121–00	EMBLEM A	1	1	1			
13	F1B–65986–00	TOOL SET	1	1	1			
14	EU0–65901–01	TOOL BAG	1	1	1			

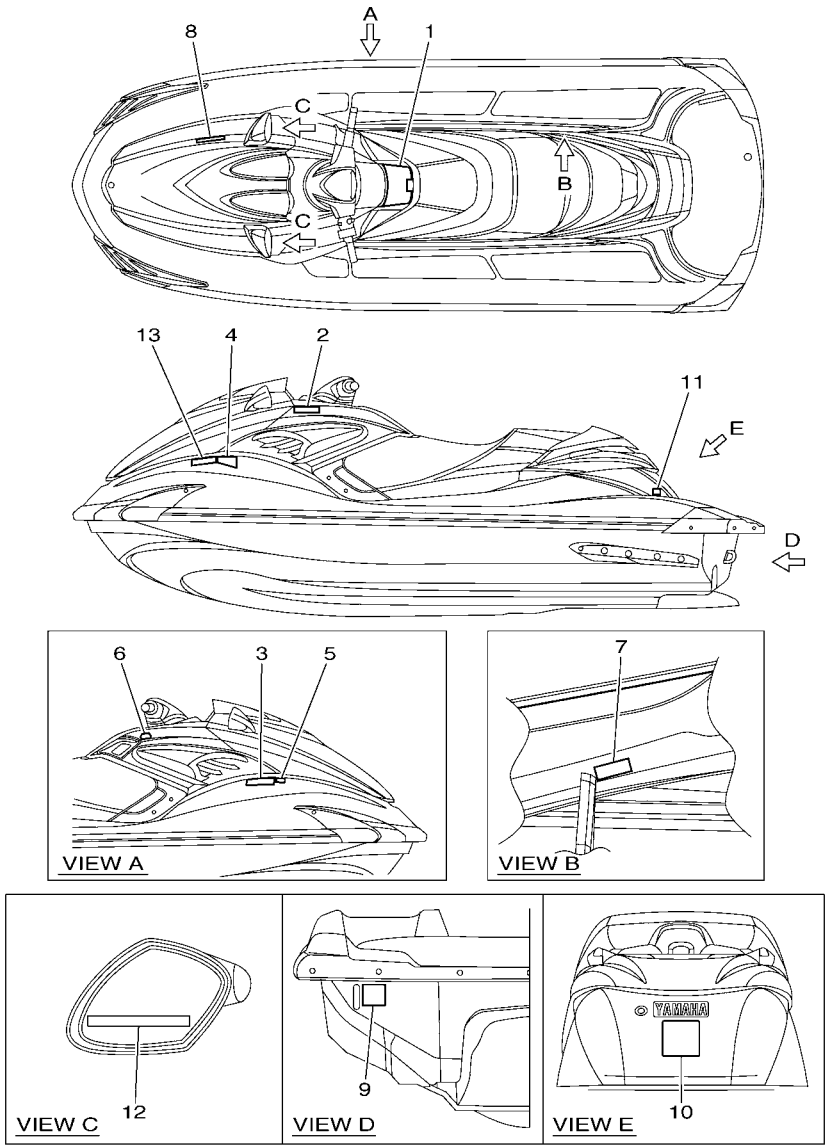

F2R1100-H380

FIG. 38 IMPORTANT LABELS

REF. NO.	PART NO.	DESCRIPTION	CAN	EUR	GENE			REMARKS
1	F2C–U41B1–10	LABEL, WARNING UNIFORM 1	1	1	1			
2	F1B–U41B1–21	LABEL, WARNING UNIFORM 1	1	1	1			
3	F1B–U41B1–31	LABEL, WARNING UNIFORM 1	1	1	1			
4	F1B–U41B2–01	LABEL, WARNING UNIFORM 2	1	1	1			
5	F1S–U415B–11	LABEL, WARNING(FUEL)	1	1	1			
6	F0V–U41D5–31	LABEL, WARNING SHIFT LEVER	1	1	1			
7	F0V–U41DB–12	LABEL, WARNING BATTERY	1	1	1			
8	F1B–U41F5–21	LABEL, FIRE EXTINGUISHER 1	1	1	1			
9	F1G–U418F–00	LABEL, RIGHTING	1	1	1			
10	F2R–U41E1–00	LABEL, SET 1	1	1	1			
11	F1S–U419E–01	LABEL 4	1					FOR CAN
12	GJ1–U419F–21	LABEL,5	2	2	2			
13	GP8–U416H–01	LABEL,WARNING(FRANCE)		1				FOR EUR

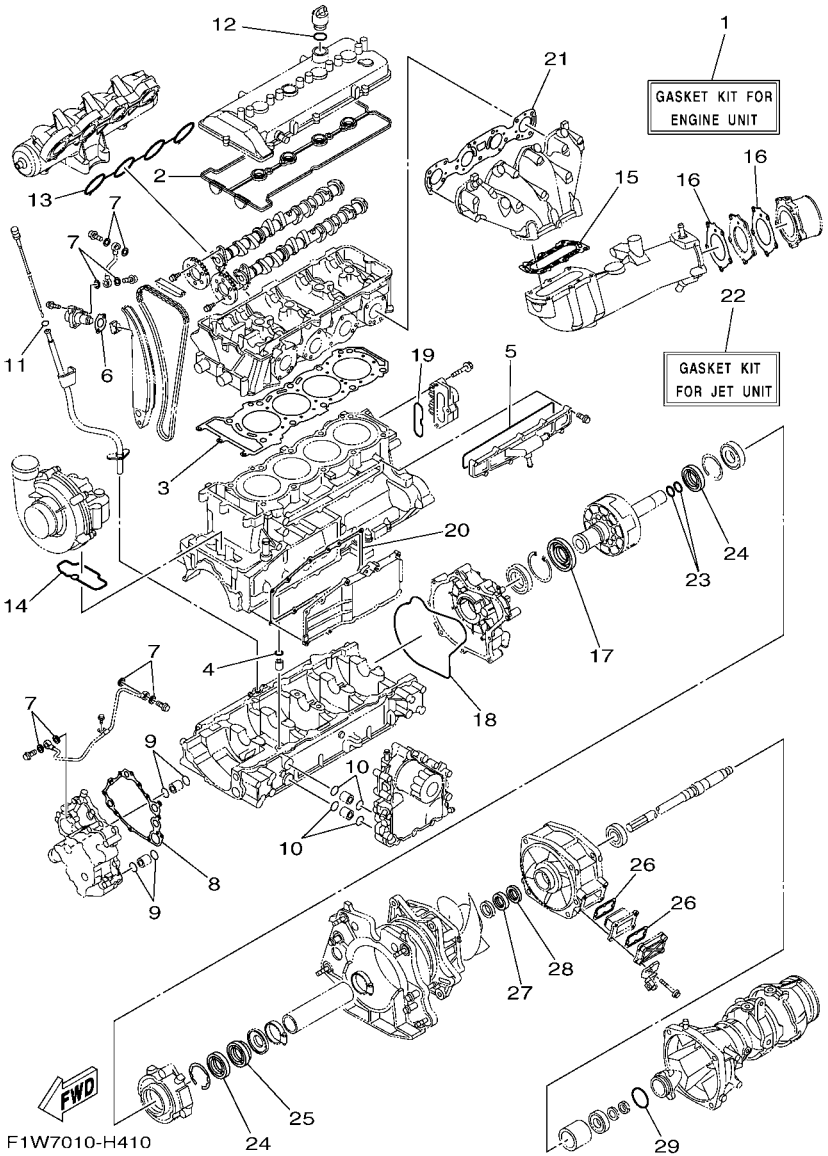

FIG. 39 REPAIR KIT 1

REF. NO.	PART NO.	DESCRIPTION	CAN	EUR	GENE			REMARKS
1	6S5–W0001–02	GASKET KIT FOR ENGINE UNIT	1	1	1			
2	6S5–11193–00	.GASKET, HEAD COVER 1	1	1	1			
3	6S5–11181–00	.GASKET, CYLINDER HEAD 1	1	1	1			
4	93210–11453	.O-RING	1	1	1			
5	6S5–12517–01	.GASKET, WATER INLET	1	1	1			
6	6S5–121E2–00	.GASKET	1	1	1			
7	90430–10007	.GASKET	8	8	8			
8	6S5–13563–00	.GASKET	1	1	1			
9	93210–21631	.O-RING	4	4	4			
10	93210–18322	.O-RING	4	4	4			
11	93210–12790	.O-RING	1	1	1			
12	93210–24M79	.O-RING	1	1	1			
13	6S5–13645–00	.GASKET, MANIFOLD 1	1	1	1			
14	6S5–1416A–00	.O-RING	1	1	1			
15	6S5–14739–00	.GASKET, MUFFLER DAMPER 1	1	1	1			
16	6S5–14749–00	.GASKET, MUFFLER DAMPER 2	2	2	2			
17	6S5–81167–10	.OIL SEAL	1	1	1			
18	6S5–81168–00	.O-RING	1	1	1			
19	93210–60ME8	.O-RING	1	1	1			
20	6S5–13557–00	.GASKET	1	1	1			
21	6S5–14613–00	.GASKET, EXHAUST PIPE	1	1	1			
22	6S5–W0001–20	GASKET KIT FOR JET UNIT	1	1	1			
23	93210–22MF1	.O-RING	2	2	2			
24	93102–29008	.OIL SEAL	2	2	2			
25	93102–29009	.OIL SEAL	1	1	1			
26	66V–42414–00	.O-RING	2	2	2			
27	93102–31009	.OIL SEAL	1	1	1			

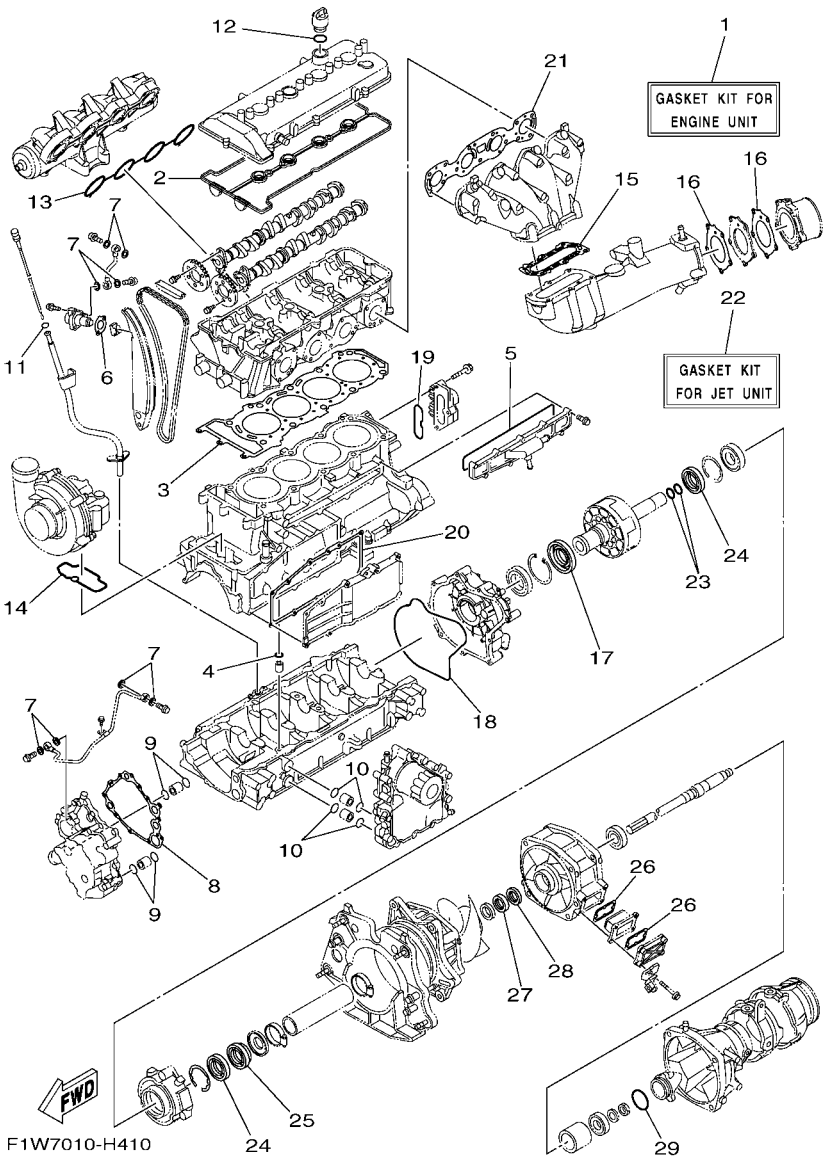

FIG. 39 REPAIR KIT 1

REF. NO.	PART NO.	DESCRIPTION	CAN	EUR	GENE			REMARKS
28	93102–31004	.OIL SEAL	1	1	1			
29	6S5–5111K–00	.O-RING 1	1	1	1			

PART NO.	REF. NO.
6S5–11026–00	1 – 9
6S5–11102–00–94	2 – 2
6S5–11119–00	2 – 12
6S5–1111G–00	1 – 10
6S5–11125–00	12 – 12
6S5–11126–00	3 – 22
6S5–11133–10	2 – 3
6S5–11160–00	12 – 6
6S5–11166–00	12 – 1
6S5–11167–00	12 – 14
6S5–11181–00	2 – 11
	39 – 3
6S5–11191–00–94	1 – 1
6S5–11193–00	1 – 3
	39 – 2
69J–11301–10	3 – 9
6S5–1131M–00–94	3 – 18
68V–11325–02	3 – 10
67F–11328–00	3 – 11
6S5–11377–00	3 – 16
6S5–11378–00	10 – 15
6S5–11411–00	4 – 1
6S5–11416–00	4 – 2
6S5–11416–10	4 – 2
6S5–11416–20	4 – 2
6S5–11416–30	4 – 2
6S5–11416–40	4 – 2
6S5–11459–00	4 – 15
6S5–11603–00	4 – 4
6S5–11631–10–B0	4 – 3
6S5–11633–00	4 – 5
6S5–11650–00	4 – 7
6S5–11654–00	4 – 8
6S5–11656–00	4 – 10
6S5–11656–10	4 – 10
6S5–11656–20	4 – 10
6S5–11656–30	4 – 10
6S5–11941–00	1 – 8
6S5–12111–00	5 – 5
6S5–12113–00	5 – 8
6S5–12116–00	5 – 7
6S5–12117–00	5 – 9
3LD–12118–00	5 – 10
51Y–12119–00	5 – 11
6S5–12121–00	5 – 6
6S5–12153–00	5 – 13
3LD–12168–00	5 – 12
3LD–12168–20	5 – 12

PART NO.	REF. NO.
3LD–12168–40	5 – 12
3LD–12168–60	5 – 12
3LD–12168–80	5 – 12
3LD–12168–A0	5 – 12
3LD–12168–F0	5 – 12
3LD–12168–H1	5 – 12
3LD–12168–K1	5 – 12
3LD–12168–M1	5 – 12
3LD–12168–R1	5 – 12
3LD–12168–U1	5 – 12
3LD–12168–W1	5 – 12
3LD–12168–Y1	5 – 12
3LD–12169–11	5 – 12
3LD–12169–31	5 – 12
3LD–12169–50	5 – 12
3LD–12169–70	5 – 12
3LD–12169–90	5 – 12
3LD–12169–E0	5 – 12
3LD–12169–G0	5 – 12
3LD–12169–J0	5 – 12
3LD–12169–L0	5 – 12
6S5–12171–00	5 – 1
6D3–12176–00	5 – 3
6S5–12181–00	5 – 2
6S5–121E2–00	5 – 20
	39 – 6
6S5–12210–00	5 – 19
6S5–12215–00	5 – 16
6S5–12228–00	2 – 7
6S5–12241–00	5 – 26
6S5–12251–00	5 – 25
6S5–12252–00	5 – 15
6S5–12279–00	5 – 17
6S5–12289–00	4 – 12
	16 – 12
60E–12411–01	2 – 14
6S5–12413–00–94	2 – 15
6S5–1243E–00	14 – 13
6S5–1243F–00	14 – 18
6S5–12443–00	14 – 10
6S5–1244G–00	14 – 46
6S5–1244H–00	14 – 28
6S5–1244J–00	14 – 24
6S5–12469–01–94	3 – 24
6S5–12517–01	3 – 25
	39 – 5
6S5–12552–00	14 – 37
6S5–12576–00	14 – 50

PART NO.	REF. NO.
6S5–12577–00	14 – 40
6S5–12578–00	2 – 17
6S5–12579–00	14 – 43
63M–12580–00	14 – 5
6S5–12581–00	14 – 4
6S5–12582–00	14 – 22
6S5–12584–00	14 – 17
6S5–12588–00	14 – 31
6S5–12589–00	14 – 26
6S5–12594–00	14 – 49
6S5–12858–00	11 – 2
6S5–12880–00	6 – 4
6S5–1310A–00–94	10 – 1
6S5–13300–00	9 – 1
6S5–13317–00	10 – 6
6S5–13337–00	3 – 27
6S5–13405–00	10 – 2
6S5–13406–00	10 – 3
6S5–13416–00	9 – 7
6S5–13418–00	5 – 22
69J–13440–01	11 – 1
60E–13446–00	9 – 6
6S5–13446–00	11 – 3
6S5–13470–00	11 – 4
6S5–13476–00	10 – 4
6S5–13477–00	10 – 5
69J–13532–00	6 – 27
6S5–13556–00	11 – 5
8FP–13556–00	6 – 15
6S5–13557–00	3 – 19
	39 – 20
6S5–13563–00	9 – 2
	39 – 8
6S5–13573–00	6 – 8
6P2–13578–00	6 – 6
6P2–13588–00	6 – 5
6S5–13641–00	6 – 2
6S5–13645–00	6 – 30
	39 – 13
6S5–13651–00	7 – 26
6S5–13652–00	7 – 31
6S5–13670–00	7 – 12
6S5–13691–00–94	7 – 13
6S5–13750–00	6 – 1
6S5–13761–00	6 – 13
6S5–13881–00	6 – 22
6S5–13907–00	23 – 1
60E–14147–00	6 – 14

PART NO.	REF. NO.
6S5–14147–00	6 – 3
6S5–14148–00	7 – 25
6S5–14159–00	6 – 29
6S5–1416A–00	7 – 4
	39 – 14
6S5–14199–00	7 – 3
6S5–141A0–00	7 – 1
6S5–14216–00	6 – 20
6S5–14243–00	7 – 19
6S5–14285–00	6 – 18
6S5–14291–00	6 – 25
6AN–14294–01	6 – 31
6D3–14305–21	22 – 1
6S5–14349–00	7 – 10
6S5–14360–00	6 – 12
6S5–14413–00–94	6 – 38
6S5–14435–00	7 – 18
6S5–14445–00	6 – 24
63P–14446–00	6 – 7
6S5–14446–00	6 – 28
6D3–1444B–00	6 – 16
6D3–14457–00	6 – 19
6D3–14495–00	7 – 28
	8 – 2
	22 – 11
6S5–14495–00	7 – 17
6S5–14496–00	6 – 10
6S5–14534–00	6 – 26
6S5–14536–00	6 – 11
6S5–14613–00	13 – 1
	39 – 21
6S5–1469W–00	13 – 15
6S5–14711–00–94	13 – 2
6S5–14721–00–94	13 – 6
6S5–14739–00	13 – 7
	39 – 15
6S5–14749–00	13 – 14
	39 – 16
6S5–14752–00	13 – 19
6S5–1475A–00	13 – 20
6S5–14771–00–94	13 – 11
6S5–14784–00–94	13 – 16
6S5–14987–00	14 – 34
6S5–15100–01–94	3 – 1
6S5–15362–00	3 – 30
6S5–15363–00	1 – 11
6S5–15486–00	10 – 7
5EL–15511–00	20 – 6

PART NO.	REF. NO.
6S5–15515–00	19 – 3
6S5–15517–00	19 – 5
6S5–15521–00	19 – 4
6S5–15590–00	19 – 1
6S5–15657–00	4 – 18
6S5–17031–00	4 – 23
6S5–17525–01	4 – 14
6S5–17529–00	4 – 25
6S5–17553–00	4 – 28
6S5–17572–01	4 – 11
6S5–17648–00	4 – 19
6S5–17658–00	4 – 20
6S5–17800–00	4 – 16
EU0–23814–30	35 – 37
6S5–24300–01	6 – 32
70R–24489–00	31 – 4
70R–24543–00	31 – 3
6AN–26311–00	22 – 2
67F–2812A–00	21 – 23
6S5–41661–00–94	24 – 4
6S5–41662–00–94	24 – 5
66V–42414–00	15 – 9
	39 – 26
67X–44517–10–94	24 – 1
663–45119–00	14 – 53
66V–45214–00–94	15 – 10
6S5–45241–00	17 – 11
6S5–45332–00–94	16 – 4
61L–45378–00	16 – 10
6AN–45511–00	15 – 17
6S5–45538–00	15 – 13
6S5–45593–00–94	16 – 11
6S5–45613–10	16 – 9
6S5–45813–01–94	4 – 13
6S5–4581J–01	16 – 1
66V–46882–00	15 – 8
6S5–5111K–00	15 – 21
	39 – 29
68N–5112T–00	27 – 3
60T–51190–00–94	15 – 37
66V–51312–01–94	15 – 4
6S5–51315–00–94	15 – 7
6S5–51318–00–94	15 – 25
6S5–51323–00	16 – 2
6S5–51326–00–94	15 – 20
63M–51334–00	15 – 26
60E–51341–00–94	19 – 22
6S5–51341–00–94	17 – 1

PART NO.	REF. NO.
61L–5169A–00	14 – 52
6S5–52358–00	17 – 10
F1K–6134M–00	35 – 24
F2C–6134M–00	35 – 25
F1K–61355–00	35 – 31
F2C–61369–00	35 – 28
F2C–613B0–00	35 – 21
F1W–613C1–00	34 – 4
F2C–61400–00	35 – 18
F1K–6142B–00	35 – 32
F1B–61438–00	34 – 19
	34 – 32
F1W–61438–00	34 – 9
F2C–6143C–00	35 – 26
F1B–61460–00	34 – 14
F2C–61460–00	34 – 34
F1B–61461–02	34 – 21
F2C–6146A–00	35 – 27
F2C–61481–00	34 – 18
F2C–6149C–00	34 – 31
F1W–6150A–00	34 – 13
F1W–61516–00	35 – 35
F1B–6151S–00	34 – 10
	34 – 20
	34 – 33
F2C–6151T–00	35 – 20
F2C–6152M–00	35 – 23
F1W–6153A–00	34 – 1
F2C–6153E–00	34 – 8
F1W–6153J–00	34 – 12
F2C–6153R–00	35 – 30
F1W–61557–00	34 – 11
F1K–61624–00	27 – 20
F1K–61628–00	30 – 11
F0X–61637–00	27 – 23
EU0–61652–00	14 – 12
	27 – 8
F0X–61652–00	27 – 24
GP7–61652–00	32 – 20
EW2–62142–00	31 – 2
F1G–62149–00	31 – 8
F2F–6214A–00	31 – 1
F1B–62150–00	31 – 32
GJ3–6215F–00	23 – 12
F1B–62241–00	32 – 4
EU0–62241–30	18 – 4
F0X–62733–00	33 – 12
GU2–62875–01	25 – 19

PART NO.	REF. NO.
F2C–6287A–00	35 – 22
F1W–6514S–00	26 – 21
F1W–6514T–00	26 – 22
F1B–6517R–00	25 – 20
GA7–65772–00	33 – 4
EU0–65901–01	37 – 14
F1B–65986–00	37 – 13
F0D–67250–10	35 – 5
F0D–67255–02	35 – 6
EW2–67256–00	35 – 7
F0D–67257–00	35 – 10
EW2–67258–01	35 – 8
EW2–67259–01	35 – 9
F1X–6725F–01	35 – 11
F2C–67410–00	35 – 19
F1K–6753B–00	33 – 10
GH7–6753B–00	32 – 18
F1B–67564–00	33 – 11
F1S–67620–00	32 – 22
FN8–6771K–00	31 – 20
F2C–67743–00	31 – 49
F2C–67743–10	31 – 50
F1B–67747–00	31 – 18
F1B–6774J–00	33 – 23
FJ0–67766–00	31 – 34
F1B–67767–00	31 – 33
EW2–67821–00	33 – 3
F2C–68090–00	23 – 15
F2C–6820A–00	23 – 14
GA7–68218–00	32 – 8
6S5–682E0–00	23 – 2
F1W–68303–00	35 – 34
F1W–6830K–00	34 – 41
F2C–68310–00	35 – 12
FK7–68312–02	35 – 15
FK7–68313–02	35 – 16
F1S–68341–00	35 – 36
EW2–68348–00	35 – 13
F2C–6838C–00	34 – 42
6S5–81128–00	6 – 21
6S5–81167–10	19 – 13
	39 – 17
6S5–81168–00	19 – 17
	39 – 18
6S5–81315–00	22 – 27
6S5–81328–00	19 – 18
66V–8132W–00	21 – 21
6S5–81337–00–94	19 – 11

PART NO.	REF. NO.
6S5–81410–00	19 – 7
6S5–81450–01	19 – 6
6S5–81800–00	20 – 1
6S5–81810–00	20 – 13
6S5–81820–00	20 – 12
6S5–81826–00	20 – 10
6S5–81830–00	20 – 3
6S5–81840–00	20 – 8
11H–81844–00	20 – 2
4G0–81844–00	20 – 4
66V–81844–00	21 – 22
5EL–81845–00	20 – 11
6BH–81845–00	21 – 2
3TB–81847–00	20 – 9
6BH–81847–00	21 – 24
1J7–81847–60	20 – 5
5A8–81850–10	20 – 14
6B6–81940–00	21 – 20
6S5–81942–00	21 – 3
60E–81950–00	21 – 18
68V–81950–00	21 – 19
6S5–81960–00	22 – 6
6S5–81972–01–94	22 – 8
6S5–81975–00	22 – 7
EU0–82110–09	23 – 4
6S5–82115–00	21 – 11
6S5–82116–00	23 – 23
6S5–82117–00	21 – 12
67F–82151–00	21 – 14
67F–82151–10	21 – 15
67F–82151–30	21 – 16
67F–82151–40	21 – 17
6D3–82157–00	21 – 13
6BH–82170–00	21 – 10
6S5–82310–00	22 – 14
61N–82317–00	12 – 9
6A0–82317–00	21 – 8
6S5–82380–00	6 – 9
68V–82504–00	22 – 26
6S5–82509–00	6 – 23
60E–82556–00	23 – 3
60E–82560–01	22 – 21
1UA–82591–00	26 – 23
6S5–8259E–00	21 – 26
6AN–8259L–00	21 – 28
6D3–8273J–01	22 – 30
6B6–83623–00	21 – 4
60E–83627–00	21 – 5

PART NO.	REF. NO.
682–84385–01	14 – 11
6S5–8572F–01	3 – 31
6P2–85780–00	22 – 28
61A–85790–00	22 – 19
6AA–85790–00	22 – 33
6S5–85886–00	6 – 17
6D3–85896–00	22 – 24
6AN–8591A–00	21 – 6
6AN–8591A–10	21 – 6
6B6–86261–00	23 – 24
6B6–86261–10	23 – 24
6B6–86265–00	23 – 25
6B6–86265–10	23 – 25
6S5–E110M–00	1 – 4
6S5–E118E–00	1 – 6
6S5–E1328–00	1 – 5
67X–E2590–10	14 – 56
6S5–E4410–01	8 – 5
6S5–E4419–00	8 – 11
6S5–E4436–00	8 – 7
6S5–E4451–00	8 – 6
6S5–G2717–00	8 – 8
6BH–G4532–00	24 – 2
6BH–G4574–00	24 – 3
6AN–G5831–00	15 – 1
6S5–R1142–00	8 – 12
6S5–R1313–00	15 – 34
6S5–R1314–00	17 – 3
6S5–R1321–03	15 – 23
6AN–R1333–01	18 – 1
6AN–R1341–00	18 – 2
6S5–R1348–00	15 – 24
6S5–R1381–00	16 – 17
F2C–U134A–03	34 – 26
F1K–U142D–00	36 – 4
F2C–U143D–01	36 – 2
F2C–U143E–00	36 – 3
F2C–U143G–00	18 – 20
EU0–U1461–02	17 – 14
F2C–U1465–00	34 – 46
F2C–U1467–01	34 – 36
GH3–U146E–00	15 – 38
GK5–U146F–00	34 – 22
	34 – 35
F2C–U146G–01	34 – 39
F2C–U1552–00	35 – 1
F2C–U1554–00	35 – 39
GP7–U155D–01	35 – 2

PART NO.	REF. NO.
GP7–U155F–00	34 – 7
	35 – 3
F2C–U156E–00	36 – 1
F1B–U1653–01	30 – 14
F2C–U1743–00	26 – 9
F1W–U2127–00	29 – 1
F2C–U213B–00	26 – 4
F0X–U213G–01	29 – 3
F1W–U2159–00	31 – 6
F2C–U2187–00	29 – 8
F2C–U2188–00	29 – 9
F1W–U224E–00	32 – 1
F1S–U2280–00	27 – 31
F1S–U2285–00	27 – 32
F1W–U250B–00	28 – 10
	28 – 17
F2C–U2511–00	28 – 1
F1B–U2512–00	28 – 5
F1B–U2519–10	28 – 6
F1W–U251D–10	28 – 24
F1W–U251E–10	28 – 26
F1W–U251L–01	28 – 25
F1W–U251M–01	28 – 27
F1W–U252E–10	28 – 8
F1W–U252F–10	28 – 15
F2C–U2624–01	30 – 18
F2C–U2624–10	30 – 21
F2C–U2624–20	30 – 19
F2C–U2624–30	30 – 32
	30 – 45
F1K–U2663–00	26 – 7
F1W–U2664–01	30 – 3
F1K–U266B–00	26 – 8
F2C–U266C–00	26 – 12
F2C–U266D–00	30 – 8
F2C–U266E–00	30 – 43
F1W–U2698–00	25 – 24
F1W–U269B–00	27 – 7
F2C–U2714–00	34 – 29
F2R–U271B–00	30 – 44
F2C–U273B–02	18 – 19
F1X–U2873–00	31 – 46
F2C–U351H–00	28 – 31
F2C–U351J–00	28 – 32
F2C–U351K–00	28 – 33
F2C–U351M–00	28 – 34
F2C–U351N–00	28 – 35
F2C–U351P–00	28 – 36

PART NO.	REF. NO.
F2C–U351R–00	28 – 37
F2C–U351S–00	28 – 38
F2C–U353B–00	25 – 42
F2C–U353B–10	25 – 43
F2C–U3581–00	28 – 30
F2C–U371A–00	30 – 1
F2C–U371B–00	30 – 2
F2R–U372A–00	30 – 6
F2R–U372B–00	30 – 7
F2C–U375E–00	30 – 31
F1W–U3768–01	26 – 10
GH1–U3774–00	30 – 27
	30 – 36
F2C–U377B–20–P0	25 – 25
F2C–U377C–20–P0	25 – 29
F2C–U377M–00	25 – 35
F2C–U377N–00	25 – 36
F2C–U378C–00	30 – 15
F2C–U3850–00	30 – 9
F1B–U3850–02	30 – 4
F1X–U4114–50	37 – 10
F1X–U411C–50	37 – 9
F1K–U411H–00	37 – 11
F1W–U4121–00	37 – 12
F1S–U415B–11	38 – 5
GP8–U416H–01	38 – 13
F2R–U417B–00	37 – 1
F2R–U417C–00	37 – 2
F2R–U417D–00	37 – 3
F2R–U417F–00	37 – 4
F2R–U417G–00	37 – 5
F2R–U417H–00	37 – 6
F2R–U417J–00	37 – 7
F2C–U417M–10	37 – 8
F1G–U418F–00	38 – 9
F1S–U419E–01	38 – 11
GJ1–U419F–21	38 – 12
F2C–U41B1–10	38 – 1
F1B–U41B1–21	38 – 2
F1B–U41B1–31	38 – 3
F1B–U41B2–01	38 – 4
F0V–U41D5–31	38 – 6
F0V–U41DB–12	38 – 7
F2R–U41E1–00	38 – 10
F1B–U41F5–21	38 – 8
F2C–U4256–00	32 – 24
F1W–U4261–00	33 – 14
F2C–U471E–00	26 – 35

PART NO.	REF. NO.
F2C–U471F–00	26 – 37
F2C–U475B–00	26 – 11
F1W–U475F–01	26 – 14
F1W–U491K–00	28 – 4
	28 – 9
	28 – 16
F1W–U4949–00	28 – 12
	28 – 19
GP7–U4953–10	30 – 13
F1W–U5148–00	26 – 5
F2C–U515D–00	25 – 33
F0X–U515E–01	25 – 14
F2C–U515N–00–P0	26 – 2
F2C–U517B–20–P0	26 – 1
F2C–U517C–01	26 – 17
F2C–U517D–00	26 – 20
F1X–U517E–01	25 – 12
	25 – 27
	25 – 32
	25 – 38
	25 – 41
F1W–U517F–00	25 – 1
F2C–U517H–01	25 – 18
F2C–U517W–00	25 – 34
F2C–U517X–00	25 – 39
F2C–U518D–00	26 – 19
F1W–U518E–02	26 – 30
F2C–U519D–01	25 – 21
F2C–U5508–02	25 – 8
F1W–U555B–00	25 – 23
F1W–U555D–01	25 – 2
F2C–U5633–00	25 – 22
F1K–U5772–02	23 – 7
	25 – 50
	31 – 44
F2C–U591A–02	30 – 40
F2C–U591C–00	30 – 41
F2C–U591D–01	30 – 42
F2C–U596B–00	26 – 34
F2C–U596C–00	26 – 36
F1K–U5983–01	25 – 48
F2C–U721B–00	24 – 12
F2C–U721B–10	24 – 13
GD0–U7249–00–05	16 – 19
F1W–U7254–00	22 – 3
F1S–U725E–00	18 – 13
6AN–U72M2–00	15 – 27
F2C–U732B–00	24 – 14

PART NO.	REF. NO.
EU0–U7354–00–01	24 – 9
EU0–U7354–00–03	24 – 9
EU0–U7354–00–05	24 – 9
EU0–U7354–00–10	24 – 9
EU0–U7354–00–20	24 – 9
F1B–U751G–00	33 – 29
F1S–U7525–01	32 – 2
F1W–U753C–01	33 – 15
F1W–U7550–00	33 – 1
F1W–U7555–00	33 – 6
F2C–U7557–01	18 – 25
GJ1–U7578–11	23 – 18
	34 – 48
F1S–U757B–00	33 – 27
F2C–U757E–01	18 – 30
F2C–U757F–01	18 – 31
F1B–U758D–02	33 – 19
F1W–U759B–00	31 – 51
F1K–U759C–00	25 – 47
	33 – 16
F1W–U759C–01	31 – 52
	33 – 17
F1B–U761D–02	27 – 10
F1B–U7626–00	32 – 10
F1B–U7628–00	32 – 15
F1W–U7629–00	32 – 13
F1B–U7656–00	32 – 9
F1B–U7698–01	32 – 6
F1W–U7711–01	31 – 16
F1B–U7773–00	31 – 17
GP7–U7831–11	31 – 22
GP7–U7832–01	31 – 27
GP7–U7833–11	31 – 24
GP7–U7834–10	31 – 23
GP7–U7835–00	31 – 25
GP7–U783F–00	31 – 29
F2C–U7844–00	31 – 30
F0D–U7856–10	31 – 43
F2C–U785G–00	31 – 41
F0D–U785G–10	23 – 10
F2C–U785H–00	31 – 38
F1K–U8169–00	27 – 30
F1K–U8211–01	23 – 6
F1K–U821D–01	23 – 9
F1K–U8221–00	23 – 5
F1S–U8221–00	25 – 52
	33 – 2
F1X–U822E–00	23 – 16

PART NO.	REF. NO.
F2C–U822E–01	34 – 45
F1W–U826C–00	23 – 19
F2C–U826C–00	30 – 24
F1K–U826C–02	27 – 37
F1X–U828E–01	25 – 10
F1S–U828H–01	27 – 16
F1K–U828K–00	25 – 49
F2C–U82AA–00	25 – 5
F1B–U8360–01	32 – 5
F1W–U8376–00	23 – 21
F1G–U8572–01	18 – 22
F1W–U8572–01	27 – 36
F2C–U8577–02	18 – 23
F1W–U8831–01	33 – 18
F2C–U883B–00	16 – 20
F2C–U883E–00	16 – 21
F1S–U883N–01	27 – 26
F1S–U883P–01	27 – 27
F1X–U883T–00	27 – 28
F2R–U884B–00	25 – 13
	30 – 46
F2C–U8952–01	30 – 26
F2C–U8952–10	30 – 35
F1S–U8K31–02	18 – 3
6S5–W0001–02	39 – 1
6S5–W0001–20	39 – 22
6S5–W009A–00–94	2 – 1
6S5–W009B–00–94	3 – 4
6S5–W1783–10	4 – 24
90101–05800	25 – 3
90105–05020	7 – 2
90105–06007	1 – 7
90105–06028	1 – 2
90105–06035	2 – 16
90105–06903	22 – 15
90105–06M07	3 – 12
90105–06M16	11 – 8
90105–06M24	11 – 7
90105–07004	5 – 4
90105–07009	2 – 6
90105–08169	11 – 9
90105–08170	11 – 10
90105–08188	7 – 8
90105–08860	27 – 29
90105–10071	3 – 5
90109–06218	26 – 24
	26 – 26
90109–06233	34 – 15

PART NO.	REF. NO.
90109–06832	16 – 22
90109–06874	24 – 10
90109–06875	24 – 11
90109–08041	18 – 29
90110–05908	34 – 6
	35 – 4
90110–06040	27 – 25
90110–06182	3 – 28
90110–06822	15 – 22
90110–06823	25 – 44
90110–08212	19 – 2
90111–06114	28 – 14
	28 – 21
90116–08032	6 – 36
90116–10044	7 – 20
90119–05803	25 – 7
90119–059U4	26 – 18
90119–06048	22 – 32
90119–06091	21 – 25
90119–06800	15 – 11
90119–06827	18 – 33
90119–06835	15 – 5
90119–06880	25 – 15
	25 – 26
	25 – 30
	25 – 37
	25 – 40
90119–06882	25 – 16
	25 – 31
90119–069UD	16 – 15
	17 – 2
	24 – 16
90119–069UH	26 – 31
	31 – 48
90119–069UK	26 – 29
90119–069UP	30 – 5
	30 – 10
90119–069UX	17 – 6
90119–06M35	21 – 7
90119–06MA3	22 – 9
90119–06MA5	22 – 10
90119–08022	6 – 35
90119–08034	13 – 4
	13 – 10
90119–08043	6 – 39
90119–08096	13 – 12
90119–08097	13 – 5
	13 – 9

PART NO.	REF. NO.
90119–08099	6 – 40
90119–08823	18 – 21
	24 – 8
90119–08836	35 – 40
90119–08842	24 – 7
90119–089U7	18 – 26
	31 – 47
90119–089UE	15 – 35
	15 – 41
90119–089UF	17 – 4
90119–089UT	21 – 1
90119–089UU	16 – 18
	35 – 38
90119–08M22	7 – 29
	8 – 3
	22 – 12
90119–10011	7 – 24
90119–10029	13 – 13
90119–10046	7 – 16
90119–10047	7 – 15
90119–10806	15 – 33
90119–10808	18 – 24
90119–10836	15 – 3
90149–05903	25 – 6
	26 – 3
	36 – 6
90149–06229	19 – 8
90149–10052	24 – 6
90150–05807	18 – 5
	34 – 43
90154–06017	34 – 30
	36 – 5
90169–049U1	31 – 26
90169–059U1	28 – 7
90170–20802	15 – 19
90176–08080	6 – 37
90176–10001	7 – 21
90179–09379	4 – 9
90183–06902	26 – 28
90185–06014	25 – 4
	25 – 17
	25 – 46
90201–052E8	19 – 21
90201–06028	7 – 9
	10 – 11
90201–06801	17 – 8
	17 – 12
90201–068G7	25 – 28

PART NO.	REF. NO.
90201–068M4	15 – 39
90201–06906	34 – 23
90201–099U3	30 – 16
	34 – 16
90201–10801	18 – 14
90201–109U6	30 – 28
	30 – 37
90201–12039	2 – 8
90201–132G5	4 – 26
90202–08002	34 – 17
90267–329UR	31 – 28
90267–48020	26 – 32
90267–48802	18 – 7
	18 – 18
	27 – 18
	33 – 22
90267–48806	29 – 2
	34 – 49
	35 – 41
90267–48807	25 – 45
	26 – 6
90267–48825	28 – 28
90267–489U1	14 – 57
	22 – 4
	23 – 8
	23 – 20
	23 – 22
	25 – 51
	27 – 38
	30 – 25
	31 – 45
	33 – 5
90267–489U2	24 – 15
	31 – 5
90267–489U6	18 – 12
	28 – 11
	28 – 13
	28 – 18
	28 – 20
	29 – 5
	31 – 7
	31 – 10
	31 – 14
	32 – 25
90267–489U8	27 – 11
	28 – 29
90267–489UE	33 – 24
90267–489UP	26 – 13

PART NO.	REF. NO.
90267–489UP	32 – 7
90269–08801	26 – 15
90280–03047	19 – 10
90387–05800	34 – 5
90387–06080	18 – 32
90387–06119	12 – 10
	21 – 9
90387–06M30	17 – 7
90387–06M60	16 – 14
90387–08M06	15 – 36
	15 – 42
90387–08M30	17 – 5
90387–11002	7 – 22
90401–10040	5 – 24
	9 – 8
90430–06M03	3 – 13
90430–10007	5 – 23
	9 – 9
	39 – 7
90430–12002	18 – 27
90430–16910	32 – 19
90445–09M21	14 – 54
90445–14804	15 – 30
90445–20800	27 – 4
90445–20804	27 – 1
90445–21807	14 – 8
90445–21813	14 – 1
90446–24M89	14 – 38
90446–27M55	14 – 41
	27 – 5
90446–27M73	27 – 2
90446–30MF1	12 – 2
90447–07001	34 – 25
90447–19006	14 – 32
	14 – 35
90447–19011	14 – 29
	14 – 44
90447–19015	15 – 28
90447–19017	6 – 33
90447–19801	14 – 7
90447–22011	14 – 14
90447–22013	14 – 19
90447–22801	14 – 2
90447–22802	14 – 9
90447–22804	31 – 37
90447–28004	32 – 12
	32 – 16
90447–28008	2 – 18

PART NO.	REF. NO.
90450–17M17	6 – 34
90450–70005	7 – 30
90450–70M13	7 – 32
90450–75003	7 – 11
90450–90M10	13 – 22
90450–99801	33 – 8
90450–99804	33 – 9
90450–99M06	13 – 21
90460–90M11	8 – 4
90462–10044	14 – 21
90464–17800	31 – 15
90464–31001	22 – 18
	22 – 29
	22 – 34
90464–32801	18 – 8
	18 – 10
	18 – 17
	27 – 19
	27 – 41
	31 – 11
	31 – 13
	33 – 21
90464–35132	14 – 23
90464–40825	34 – 47
90464–99801	18 – 11
90464–99804	29 – 6
90465–11829	14 – 55
	16 – 16
	23 – 13
	31 – 39
	31 – 40
	31 – 42
	34 – 40
	34 – 44
90465–11M10	31 – 36
90465–13M18	22 – 17
90465–14M66	12 – 5
	21 – 29
90467–089U1	23 – 11
90467–11019	12 – 13
90467–14803	15 – 31
	32 – 14
	32 – 21
90467–150A0	14 – 6
90467–150A1	14 – 30
90467–160A0	14 – 25
	14 – 33
	14 – 36

PART NO.	REF. NO.
90467–160A0	14 – 42
	14 – 45
	14 – 47
90467–170A0	14 – 39
90467–17802	33 – 13
90467–18804	27 – 6
90467–190A0	3 – 17
	3 – 23
90467–200A0	10 – 16
	14 – 3
	14 – 15
	14 – 16
	14 – 20
	14 – 27
	14 – 48
	14 – 51
	27 – 14
90467–21800	27 – 12
90467–240A0	2 – 19
90467–240A2	12 – 3
	12 – 4
	12 – 15
90467–25801	32 – 11
90467–26800	32 – 3
	32 – 17
	32 – 26
90480–06M46	19 – 25
90480–19800	25 – 11
90480–21M63	7 – 23
90480–22801	8 – 10
90480–22M15	7 – 27
	8 – 1
	22 – 13
90480–38800	27 – 15
90600–91736	18 – 6
	18 – 16
	27 – 17
	29 – 4
	31 – 9
	31 – 12
	32 – 23
	33 – 20
90601–118UF	15 – 29
	27 – 9
90601–152U3	16 – 23
90601–155U4	31 – 31
90601–162U5	31 – 21
90601–170UG	33 – 7

PART NO.	REF. NO.
90601–200U1	23 – 17
	27 – 13
90601–200U7	29 – 7
90605–502U1	26 – 16
90605–502U2	25 – 9
90699–50004	31 – 35
91314–06020	9 – 4
91314–06035	10 – 9
91314–06060	10 – 10
91317–05010	19 – 20
91317–06014	19 – 19
91380–06016	22 – 25
91380–06020	19 – 24
91380–06025	5 – 21
91809–16001	2 – 4
	2 – 5
92014–06012	2 – 13
92903–06600	2 – 10
92903–08600	20 – 16
9290P–20600	15 – 18
92990–06100	20 – 17
	34 – 3
92990–06200	34 – 2
92990–10600	22 – 20
92990–12200	18 – 28
	27 – 22
92995–06600	19 – 23
	22 – 23
92995–08600	3 – 15
9299R–05200	18 – 9
	27 – 34
9299R–06200	28 – 2
	28 – 22
	33 – 26
	33 – 28
	34 – 28
	34 – 38
9299R–08200	26 – 38
	27 – 40
	30 – 22
	30 – 34
9299R–10200	30 – 20
	30 – 29
	30 – 38
93102–29008	16 – 5
	39 – 24
93102–29009	16 – 8
	39 – 25

PART NO.	REF. NO.
93102–31004	15 – 16
	39 – 28
93102–31009	15 – 15
	39 – 27
93210–11453	3 – 3
	39 – 4
93210–12790	3 – 32
	39 – 11
93210–18322	11 – 11
	39 – 10
93210–21631	9 – 5
	39 – 9
93210–22MF1	16 – 3
	39 – 23
93210–24M79	1 – 12
	39 – 12
93210–60ME8	22 – 31
	39 – 19
93212–02001	12 – 7
93306–00805	19 – 12
93306–20654	15 – 12
93306–20655	16 – 7
93306–30582	15 – 14
93316–00901	4 – 17
93410–12003	20 – 7
93450–24028	4 – 6
93450–63160	4 – 21
93450–66156	16 – 6
93450–75161	4 – 22
93604–10M03	3 – 8
	7 – 5
	11 – 6
93606–12019	3 – 7
	9 – 3
	13 – 8
	15 – 6
	15 – 32
	16 – 13
93608–16M16	13 – 3
94591–66152	5 – 14
94702–00427	22 – 16
95023–06012	3 – 34
	9 – 10
95023–06025	3 – 26
95024–06014	3 – 20
95024–06020	3 – 21
	10 – 14
95024–06030	10 – 13

PART NO.	REF. NO.
95024–06035	10 – 12
95024–08035	13 – 17
95024–08050	19 – 15
95380–06700	20 – 18
9538R–06600	17 – 9
	17 – 13
9538R–06700	15 – 40
	34 – 24
95720–06300	26 – 25
	35 – 29
	35 – 33
9572R–05300	27 – 35
9572R–06300	26 – 27
	26 – 33
	28 – 3
	28 – 23
	31 – 19
	33 – 25
	33 – 30
	34 – 27
	34 – 37
9572R–08300	26 – 39
	27 – 39
	30 – 12
	30 – 17
	30 – 23
	30 – 33
9572R–10300	18 – 15
	30 – 30
	30 – 39
95780–08300	22 – 5
95814–06030	5 – 18
95814–06065	7 – 7
95814–06070	3 – 6
95814–08065	7 – 6
95817–06014	10 – 8
95824–06030	12 – 11
95880–06014	3 – 33
97013–06055	2 – 9
97013–08030	20 – 15
97095–06016	22 – 22
97095–08040	3 – 14
97513–05514	19 – 9
97780–60516	8 – 9
97780–60520	21 – 27
97780–60530	12 – 8
97880–03008	35 – 14
97880–05025	35 – 17

PART NO.	REF. NO.
9788R–05025	27 – 33
99009–24700	4 – 27
99009–72500	19 – 14
99530–10114	3 – 2
	3 – 29
	19 – 16
99590–10114	13 – 18
99590–14016	7 – 14
	15 – 2
99780–12600	27 – 21